FS-1035MFP
FS-1135MFP

SERVICE MANUAL

Published in August 2011
2MHSM060
First Edition

CAUTION

RISK OF EXPLOSION IF BATTERY IS REPLACED BY AN INCORRECT TYPE. DISPOSE OF USED BATTERIES ACCORDING TO THE INSTRUCTIONS.

It may be illegal to dispose of this battery into the municipal waste stream. Check with your local solid waste officials for details in your area for proper disposal.

ATTENTION

IL Y A UN RISQUE D'EXPLOSION SI LA BATTERIE EST REMPLACEE PAR UN MODELE DE TYPE INCORRECT. METTRE AU REBUT LES BATTERIES UTILISEES SELON LES INSTRUCTIONS DONNEES.

Il peut être illégal de jeter les batteries dans des eaux d'égout municipales. Vérifiez avec les fonctionnaires municipaux de votre région pour les détails concernant des déchets solides et une mise au rebut appropriée.

Notation of products in the manual

For the purpose of this service manual, products are identified by print speed, and presence of FAX.

FS-1030MFP : 3in1 model by 30ppm (without FAX and document processor)
FS-1030MFP/DP : 3in1 model by 30ppm (without FAX)
FS-1035MFP/DP : 3in1 model by 35ppm (without FAX)
FS-1130MFP : 4in1 model by 30ppm (with FAX)
FS-1135MFP: : 4in1 model by 35ppm (with FAX)

Revision history

Revision	Date	Replaced pages	Remarks

This page is intentionally left blank.

Safety precautions

This booklet provides safety warnings and precautions for our service personnel to ensure the safety of their customers, their machines as well as themselves during maintenance activities. Service personnel are advised to read this booklet carefully to familiarize themselves with the warnings and precautions described here before engaging in maintenance activities.

Safety warnings and precautions

Various symbols are used to protect our service personnel and customers from physical danger and to prevent damage to their property. These symbols are described below:

⚠**DANGER:** High risk of serious bodily injury or death may result from insufficient attention to or incorrect compliance with warning messages using this symbol.

⚠**WARNING:** Serious bodily injury or death may result from insufficient attention to or incorrect compliance with warning messages using this symbol.

⚠**CAUTION:** Bodily injury or damage to property may result from insufficient attention to or incorrect compliance with warning messages using this symbol.

Symbols

The triangle (△) symbol indicates a warning including danger and caution. The specific point of attention is shown inside the symbol.

General warning. Warning of risk of electric shock.

Warning of high temperature.

⃠ indicates a prohibited action. The specific prohibition is shown inside the symbol.

General prohibited action. Disassembly prohibited.

● indicates that action is required. The specific action required is shown inside the symbol.

General action required. Remove the power plug from the wall outlet.

Always ground the copier.

1. Installation Precautions

WARNING

- Do not use a power supply with a voltage other than that specified. Avoid multiple connections to one outlet: they may cause fire or electric shock. When using an extension cable, always check that it is adequate for the rated current. .....
- Connect the ground wire to a suitable grounding point. Not grounding the copier may cause fire or electric shock. Connecting the earth wire to an object not approved for the purpose may cause explosion or electric shock. Never connect the ground cable to any of the following: gas pipes, lightning rods, ground cables for telephone lines and water pipes or faucets not approved by the proper authorities. .....

CAUTION:

- Do not place the copier on an infirm or angled surface: the copier may tip over, causing injury. .....
- Do not install the copier in a humid or dusty place. This may cause fire or electric shock. .....
- Do not install the copier near a radiator, heater, other heat source or near flammable material. This may cause fire. .....
- Allow sufficient space around the copier to allow the ventilation grills to keep the machine as cool as possible. Insufficient ventilation may cause heat buildup and poor copying performance. .....
- Always handle the machine by the correct locations when moving it. .....
- Always use anti-toppling and locking devices on copiers so equipped. Failure to do this may cause the copier to move unexpectedly or topple, leading to injury. .....
- Avoid inhaling toner or developer excessively. Protect the eyes. If toner or developer is accidentally ingested, drink a lot of water to dilute it in the stomach and obtain medical attention immediately. If it gets into the eyes, rinse immediately with copious amounts of water and obtain medical attention. .....
- Advice customers that they must always follow the safety warnings and precautions in the copier's instruction handbook. .....

2. Precautions for Maintenance

WARNING

- Always remove the power plug from the wall outlet before starting machine disassembly. .....
- Always follow the procedures for maintenance described in the service manual and other related brochures. .....
- Under no circumstances attempt to bypass or disable safety features including safety mechanisms and protective circuits. .....
- Always use parts having the correct specifications. .....
- Always use the thermostat or thermal fuse specified in the service manual or other related brochure when replacing them. Using a piece of wire, for example, could lead to fire or other serious accident. .....
- When the service manual or other serious brochure specifies a distance or gap for installation of a part, always use the correct scale and measure carefully. .....
- Always check that the copier is correctly connected to an outlet with a ground connection. .....
- Check that the power cable covering is free of damage. Check that the power plug is dust-free. If it is dirty, clean it to remove the risk of fire or electric shock. .....
- Never attempt to disassemble the optical unit in machines using lasers. Leaking laser light may damage eyesight. .....
- Handle the charger sections with care. They are charged to high potentials and may cause electric shock if handled improperly. .....

CAUTION

- Wear safe clothing. If wearing loose clothing or accessories such as ties, make sure they are safely secured so they will not be caught in rotating sections. .....
- Use utmost caution when working on a powered machine. Keep away from chains and belts. .....
- Handle the fixing section with care to avoid burns as it can be extremely hot. .....
- Check that the fixing unit thermistor, heat and press rollers are clean. Dirt on them can cause abnormally high temperatures. .....

- Do not remove the ozone filter, if any, from the copier except for routine replacement. .....
- Do not pull on the AC power cord or connector wires on high-voltage components when removing them; always hold the plug itself. .....
- Do not route the power cable where it may be stood on or trapped. If necessary, protect it with a cable cover or other appropriate item. .....
- Treat the ends of the wire carefully when installing a new charger wire to avoid electric leaks. .....
- Remove toner completely from electronic components. .....
- Run wire harnesses carefully so that wires will not be trapped or damaged. .....
- After maintenance, always check that all the parts, screws, connectors and wires that were removed, have been refitted correctly. Special attention should be paid to any forgotten connector, trapped wire and missing screws. .....
- Check that all the caution labels that should be present on the machine according to the instruction handbook are clean and not peeling. Replace with new ones if necessary. .....
- Handle greases and solvents with care by following the instructions below: .....
  · Use only a small amount of solvent at a time, being careful not to spill. Wipe spills off completely.
  · Ventilate the room well while using grease or solvents.
  · Allow applied solvents to evaporate completely before refitting the covers or turning the power switch on.
  · Always wash hands afterwards.
- Never dispose of toner or toner bottles in fire. Toner may cause sparks when exposed directly to fire in a furnace, etc. .....
- Should smoke be seen coming from the copier, remove the power plug from the wall outlet immediately. .....

3. Miscellaneous

WARNING

- Never attempt to heat the drum or expose it to any organic solvents such as alcohol, other than the specified refiner; it may generate toxic gas. .....
- Keep the machine away from flammable liquids, gases, and aerosols. A fire or an electric shock might occur. .....

This page is intentionally left blank.

CONTENTS

1-1 Specifications

1-1-1 Specifications 1-1-1
1-1-2 Parts names 1-1-6
(1) Overall 1-1-6
(2) Operation panel 1-1-7
(3) Option 1-1-8
1-1-3 Machine cross section 1-1-9

1-2 Installation

1-2-1 Installation environment 1-2-1
1-2-2 Unpacking 1-2-2
(1) Unpacking 1-2-2
(2) Removing the tapes 1-2-3
1-2-3 Installing the expansion memory (option) 1-2-6

1-3 Maintenance Mode

1-3-1 Maintenance mode 1-3-1
(1) Executing a maintenance item 1-3-1
(2) Maintenance modes item list 1-3-2
(3) Contents of the maintenance mode items 1-3-5
1-3-2 Service mode 1-3-54
(1) Executing a service mode 1-3-54
(2) Description of service mode 1-3-55

1-4 Troubleshooting

1-4-1 Paper misfeed detection 1-4-1
(1) Paper misfeed indication 1-4-1
(2) Paper misfeed detection condition 1-4-2
1-4-2 Self-diagnostic function 1-4-3
(1) Self-diagnostic function 1-4-3
(2) Self diagnostic codes 1-4-4
1-4-3 Image formation problems 1-4-13
(1) Completely blank printout. 1-4-14
(2) All-black printout. 1-4-15
(3) Dropouts. 1-4-15
(4) Black dots. 1-4-16
(5) Black horizontal streaks. 1-4-16
(6) Black vertical streaks. 1-4-16
(7) Unsharpness. 1-4-17
(8) Gray background. 1-4-17
(9) Dirt on the top edge or back of the paper. 1-4-17
(10) Undulated printing at the right edge (scanning start position). 1-4-18
1-4-4 Electric problems 1-4-19
1-4-5 Mechanical problems 1-4-23
1-4-6 Send error code 1-4-24
(1) Scan to SMB error codes 1-4-24
(2) Scan to FTP error codes 1-4-25
(3) Scan to E-mail error codes 1-4-27

1-4-7 Error codes 1-4-29
(1) Error code 1-4-29
(2) Table of general classification 1-4-30
(2-1) U004XX error code table: Interrupted phase B 1-4-33
(2-2) U006XX error code table: Problems with the unit 1-4-34
(2-3) U008XX error code table: Page transmission error 1-4-34
(2-4) U009XX error code table: Page reception error 1-4-34
(2-5) U010XX error code table: G3 transmission 1-4-35
(2-6) U011XX error code table: G3 reception 1-4-37
(2-7) U017XX error code table: V.34 transmission 1-4-38
(2-8) U018XX error code table: V.34 reception 1-4-39
(2-9) U023XX error code table: Relay command abnormal reception 1-4-39
(2-10) U044XX error code table: Encrypted transmission 1-4-39

1-5 Assembly and Disassembly

1-5-1 Precautions for assembly and disassembly 1-5-1
(1) Precautions 1-5-1
(2) Drum unit 1-5-1
(3) Toner 1-5-1
(4) How to tell a genuine Kyocera Mita toner container 1-5-2
1-5-2 Outer covers 1-5-3
(1) Detaching and refitting the left cover and right cover 1-5-3
1-5-3 Paper feed section 1-5-6
(1) Detaching and refitting the paper feed assembly (paper feed roller and pickup roller) 1-5-6
(2) Detaching and refitting the retard roller assembly 1-5-8
(3) Detaching and refitting the MP paper feed roller 1-5-10
(4) Note on removing and Installing the upper registration roller and lower registration roller 1-5-12
1-5-4 Optical section 1-5-13
(1) Detaching and refitting the DP 1-5-13
(2) Detaching and refitting the scanner unit 1-5-14
(3) Detaching and refitting the laser scanner unit (LSU) 1-5-17
(4) Replacing the image scanner unit (ISU) 1-5-21
1-5-5 Developer section 1-5-27
(1) Detaching and refitting the developer unit 1-5-27
1-5-6 Drum section 1-5-28
(1) Detaching and refitting the drum unit 1-5-28
(2) Detaching and refitting the main charger unit 1-5-29
1-5-7 Transfer/separation section 1-5-30
(1) Detaching and refitting the transfer roller 1-5-30
1-5-8 Fuser section 1-5-32
(1) Detaching and refitting the fuser unit 1-5-32
(2) Switching the fuser pressure 1-5-36
1-5-9 PWBs 1-5-37
(1) Detaching and refitting the control PWB 1-5-37
(2) Detaching and refitting the power source PWB 1-5-40
(3) Detaching and refitting the high voltage PWB 1-5-43
(4) Detaching and refitting the scanner PWB 1-5-47
(5) Detaching and refitting the FAX control PWB 1-5-48

1-5-10 Others 1-5-49
(1) Detaching and refitting the main motor 1-5-49
(2) Direction of installing the left cooling fan motor, right cooling fan motor and power source fan motor 1-5-50
1-5-11 Document processor 1-5-51
(1) Detaching and refitting the DP rear cover and DP front cover 1-5-51
(2) Detaching and refitting the DP drive PWB 1-5-52
(3) Detaching and refitting the feed pulley and forwarding pulley 1-5-53
(4) Detaching and refitting the separation pad assembly 1-5-56

1-6 Requirements on PWB Replacement

1-6-1 Upgrading the firmware 1-6-1
1-6-2 Remarks on control PWB replacement 1-6-2

2-1 Mechanical Construction

2-1-1 Paper feed/conveying section 2-1-1
(1) Cassette paper feed section 2-1-1
(2) MP tray paper feed section 2-1-2
(3) Paper conveying section 2-1-3
2-1-2 Drum section 2-1-4
(1) Drum section 2-1-4
(2) Main charger unit 2-1-5
2-1-3 Optical section 2-1-6
(1) Scanner unit 2-1-6
(2) Image scanner unit (ISU) 2-1-7
(3) Laser scanner unit 2-1-9
2-1-4 Developing section 2-1-11
2-1-5 Transfer/separation section 2-1-13
2-1-6 Cleaning section 2-1-14
2-1-7 Fuser section 2-1-16
2-1-8 Paper exit section 2-1-18
2-1-9 Duplex/conveying section 2-1-20
2-1-10 Document processor 2-1-21
(1) Original feed section 2-1-21
(2) Original conveying section 2-1-22
(3) Original switchback/eject sections 2-1-23

2-2 Electrical Parts Layout

2-2-1 Electrical parts layout 2-2-1
(1) PWBs 2-2-1
(2) Switches and sensors 2-2-3
(3) Other electrical components 2-2-4
(4) Document processor 2-2-5

2-3 Operation of the PWBs

2-3-1 Power source PWB 2-3-1
2-3-2 Control PWB 2-3-4
2-3-3 Scanner PWB 2-3-11
2-3-4 DP drive PWB 2-3-14

2-4 Appendixes

2-4-1 Appendixes 2-4-1
(1) Wiring diagram 2-4-1
(2) Repetitive defects gauge 2-4-3
(3) Maintenance parts list 2-4-4
(4) Firmware Environment Commands 2-4-5

INSTALLATION GUIDE

PAPER FEEDER

1-1-1 Specifications

Machine

Item			Specifications			
			3 in 1 model (without FAX)		4 in 1 model (with FAX)	
			30ppm	35ppm	30ppm	35ppm
Type			Desktop			
Printing method			Electrophotography by semiconductor laser, single drum system			
Originals			Sheet, Book, 3-dimensional objects (maximum original size: Folio/Legal)			
Original feed system			Fixed			
Paper weight	Cassette		60 to 120 g/m² (Duplex: 60 to 105 g/m²)			
	MP tray		60 to 220 g/m²			
Paper type	Cassette		Plain, Preprinted, Bond, Recycled, Rough, Letterhead, Color, Prepunched, High quality, Custom 1-8			
	MP tray		Plain, Transparency, Preprinted, Labels, Bond, Recycled, Vellum, Rough, Letterhead, Color, Prepunched, Envelope, Cardstock, Thick, High quality, Custom 1-8			
Paper size	Cassette		A4, A5, B5, Letter, Legal, Statement,Oficio II, Folio, 16K, 216×340, Custom			
	MP tray		A4, A5, A6, B5, ISO B5, Letter, Legal, Statement, Executive, Oficio II, Folio, 16K, 216×340, Custom			
Zoom level			Manual mode : 25 to 400%, 1% increments Auto mode : 400%, 200%, 141%, 129%, 115%, 90%, 86%, 78%, 70%, 64%, 50%, 25%			
Copying speed						
	When using the DP (Cassette)	A4R	20 sheets/min			
		LetterR	21 sheets/min			
		Leagal	17 sheets/min			
		B5R	22 sheets/min			
		A5R	17 sheets/min			
	When the DP is not used (Cassette)	A4R	30 sheets/min	35 sheets/min	30 sheets/min	35 sheets/min
		LetterR	32 sheets/min	37 sheets/min	32 sheets/min	37 sheets/min
		Leagal	26 sheets/min	30 sheets/min	26 sheets/min	30 sheets/min
		B5R	24 sheets/min	24 sheets/min	24 sheets/min	24 sheets/min
		A5R	17 sheets/min	17 sheets/min	17 sheets/min	17 sheets/min
		A6R	17 sheets/min	17 sheets/min	17 sheets/min	17 sheets/min
First copy time (A4, feed from cassette)			When using the DP : 7.9 s or less When the DP is not used: 6.9 s or less			
Warm-up time (22 °C/71.6 °F, 60% RH)			Power on : 20 s or less			
Paper capacity	Cassette		250 sheets (80g/m²)			
	MP tray		50 sheets (80 g/m², plain paper, A4/Letter or less)			

Item		Specifications			
		3 in 1 model (without FAX)		4 in 1 model (with FAX)	
		30ppm	35ppm	30ppm	35ppm
Output tray capacity		150 sheets (80g/m^2)			
Continuous copying		1 to 999 sheets			
Light source		Exposure lamp (LED)			
Scanning system		Flat bed scanning by CCD image sensor			
Photoconductor		OPC drum (diameter 30 mm)			
Image write system		Semiconductor laser			
Charging system		Scorotron (positive charging)			
Developing system		Mono component dry developing method Toner replenishing: Automatic from the toner container			
Transfer system		Transfer roller (negative chargeing)			
Separation system		Small diameter separation, discharger electrode			
Cleaning system		Drum: Counter blade			
Charge erasing system		Exposure by cleaning lamp (LED)			
Fusing system		Heat and pressure fusing with the heat roller and the press roller Heat source: halogen heater Abnormally high temperature protection devices: thermostat			
CPU		PowerPC440 (667MHz)			
Main memory	**Standard**	256 MB			
	Maximum	768 MB			
Interface	**Standard**	USB interface connector: 1 (USB Hi-speed) USB host: 1 Network interface: 1 (10BASE-T/100BASE-TX)			
	Option	KUIO/W slot: 1 (It uses it by fax in 4in1 model.)			
Resolution	**Reading**	600 × 600 dpi			
	Writing	600 × 600 dpi	1200 × 1200 dpi	600 × 600 dpi	1200 × 1200 dpi
Operating environment	**Temperature**	10 to 32.5 °C/50 to 90.5 °F			
	Humidity	15 to 80% RH			
	Altitude	2,500 m/8,202 ft or less			
	Brightness	1,500 lux or less			
Dimensions (W × D × H)		494 × 410 × 366 mm 19 7/16 × 16 1/8 × 14 7/16” (When using the original cover)		494 × 430 × 448 mm 19 7/16 × 16 15/16 × 17 1/4” (When using the DP)	
Weight (with toner container)		15 kg / 33.1 lb (with original cover) 18 kg / 39.7 lb (with DP)			
Space required (W × D) (using MP tray)		494 × 613 mm 19 7/16 × 24 1/8”		494 × 633 mm 19 7/16 × 24 15/16”	

Item	Specifications			
	3 in 1 model (without FAX)		4 in 1 model (with FAX)	
	30ppm	35ppm	30ppm	35ppm
Power source	120 V AC, 60 Hz, more than 10.0 A 220 - 240 V AC, 50/60 Hz, more than 6.0 A			
Options	Paper feeder × 2, Expanded memory, CF card (for printer), Network interface kit			

Printer

Item			Specifications	
			30ppm	35ppm
Printing speed				
	Simplex (Cassette)	**A4R**	30 sheets/min	35 sheets/min
		LetterR	32 sheets/min	37 sheets/min
		Leagal	26 sheets/min	30 sheets/min
		B5R	24 sheets/min	24 sheets/min
		A5R	17 sheets/min	17 sheets/min
		A6R	17 sheets/min	17 sheets/min
	Dupplex (Cassette)	**A4R**	17 sheets/min	19 sheets/min
		LetterR	18 sheets/min	20 sheets/min
		Leagal	16 sheets/min	18 sheets/min
First print time (A4, feed from cassette)			6.0 s or less	7.0 s or less
Resolution			Fast 1200 600 dpi 300 dpi	Fine 1200 Fast 1200 600 dpi 300 dpi
Operating system			Windows 2000, Windows XP, Windows XP Professional, Windows Server 2003, Windows Server 2003 x64 Edition, Windows Vista x86 Edition, Windows Vista x64 Edition, Windows 7 x86 Edition, Windows 7 x64 Edition, Windows Server 2008, Windows Server 2008 x64 Edition Apple Macintosh OS 9.x, Apple Macintosh OS X	
Interface			USB interface connector: 1 (USB Hi-speed) USB host: 1 Network interface: 1 (10BASE-T/100BASE-TX)	
Page description language			PRESCRIBE	

Scanner

Item		Specifications
Operating system		Windows 2000 (Service Pack 4), Windows XP, Windows Vista, Windows 7, Windows Server 2003, Windows Server 2008
Resolution		600 dpi, 400 dpi, 300 dpi, 200 dpi, 200 × 400 dpi, 200 × 100 dpi
File format		JPEG, TIFF, PDF, XPS
Scanning speed	**Simplex**	B/W : 35 images/min Color: 14 images/min (A4 landscape, 300 dpi, Image quality: Text/Photo original)
	Duplex	B/W : 18 images/min Color: 8 images/min (A4 landscape, 300 dpi, Image quality: Text/Photo original)
Interface		Ethernet (10 BASE-T/100 BASE-TX), USB2.0 (Hi-Speed USB)
Network protocol		TCP/IP
Transmission system		PC transmission SMB: Scan to PC E-mail SMTP: Scan to E-mail FTP transmission FTP, FTP over SSL: Scan to FTP USB transmission USB: Scan to USB TWAIN scan *1 WIA scan *2

*1 Available operating system: Windows XP, Windows Server 2003, Windows Vista, Windows Server 2008, Windows 7

*2 Available operating system: Windows Vista, Windows Server 2008, Windows 7

Document processor (Standard model only)

Item	Specifications
Original feed method	Automatic feed
Supported original types	Sheet originals
Original sizes	Maximum: A4/Legal Minimum : A5/Statement
Original weights	Simplex: 50 to 120 g/m^2 Duplex : 50 to 110 g/m^2
Loading capacity	50 sheets (50 to 80 g/m^2) or less
Dimensions (W × D × H)	490 × 339 × 104 mm 19 5/16 × 13 3/8 × 4 1/8”
Weight	3 kg/ 6.6 lb or less

FAX (4 in 1 model (with FAX) only)

Item	Specifications
Compatibility	Super G3
Communication line	Subscriber telephone line
Transmission time	3 s or less (33600 bps, JBIG, ITU-T A4 #1 chart)
Transmission speed	33600/31200/28800/26400/24000/21600/19200/16800/14400/12000/9600/7200/4800/2400 bps
Coding scheme	JBIG/MMR/MR/MH
Error correction	ECM
Original size	A4, B5(JIS), A5, Legal, Letter, Statement, Oficio II, 216x340
Automatic document feed	Max. 50 sheets
Scanner resolution	Horizontal × Vertical 200 × 100 dpi Normal (8 dot/mm × 3.85 line/mm) 200 × 200 dpi Fine (8 dot/mm × 7.7 line/mm) 200 × 400 dpi Super fine (8 dot/mm × 15.4 line/mm) 400 × 400 dpi Ultra fine (16 dot/mm × 15.4 line/mm)
Printing resolution	600 × 600 dpi
Gradations	256 shades
One-Touch key	22 keys
Multi-Station transmission	Max. 100 destinations
Substitute memory reception	256 sheets or more (when using ITU-T A4 #1 chart)
Image memory capacity	3.5 MB (standard) (for incoming faxed originals)
Report output	Sent result report, FAX RX result report, Activity report, Status page

NOTE: These specifications are subject to change without notice.

1-1-2 Parts names

(1) Overall

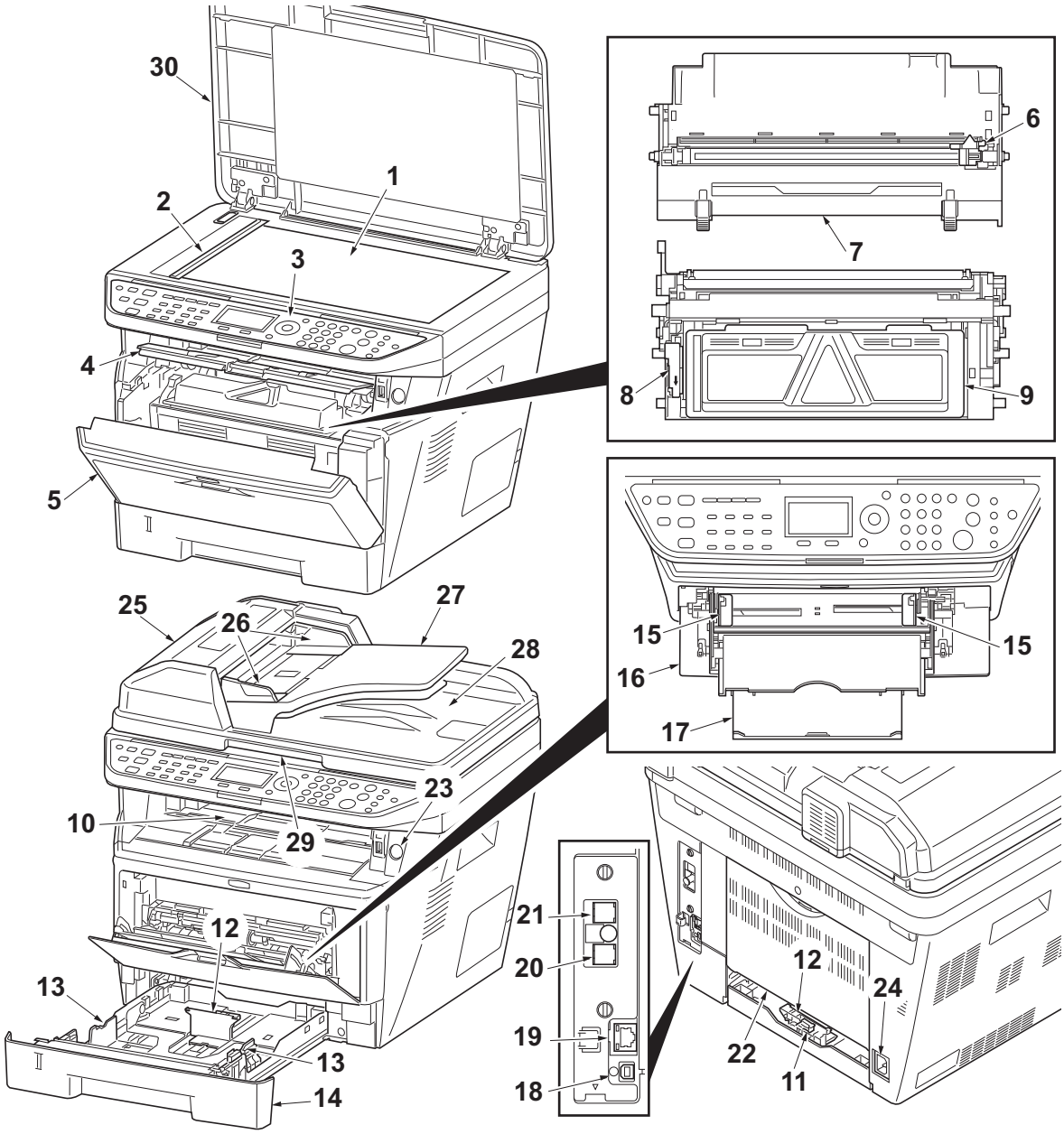

Figure 1-1-1

1. Platen (contact glass)
2. Original size Indicator plate
3. Operation panel
4. Top cover
5. Front cover
6. Main charger cleaner
7. Drum unit
8. Lock lever
9. Toner container
10. Top tray
11. Paper length guide
12. Paper stopper
13. Paper width guides
14. Cassette
15. Paper width guides (MP tray)
16. MP (Multi-Purpose) tray
17. MP tray extension
18. USB Interface connector
19. Network Interface connector
20. Tel connector (T1) *1
21. Line connector (L1) *1
22. Rear cover
23. Power switch
24. Power cord connector
25. Top cover
26. Original width guides *2
27. Original table *2
28. Original eject table *2
29. Opening handle *2
30. USB host connector
31. Original cover *3

*1: 4in1 model (with FAX) only

*2: Only model with Document Processor as standard / *3: Only model with original cover as standard

(2) Operation panel

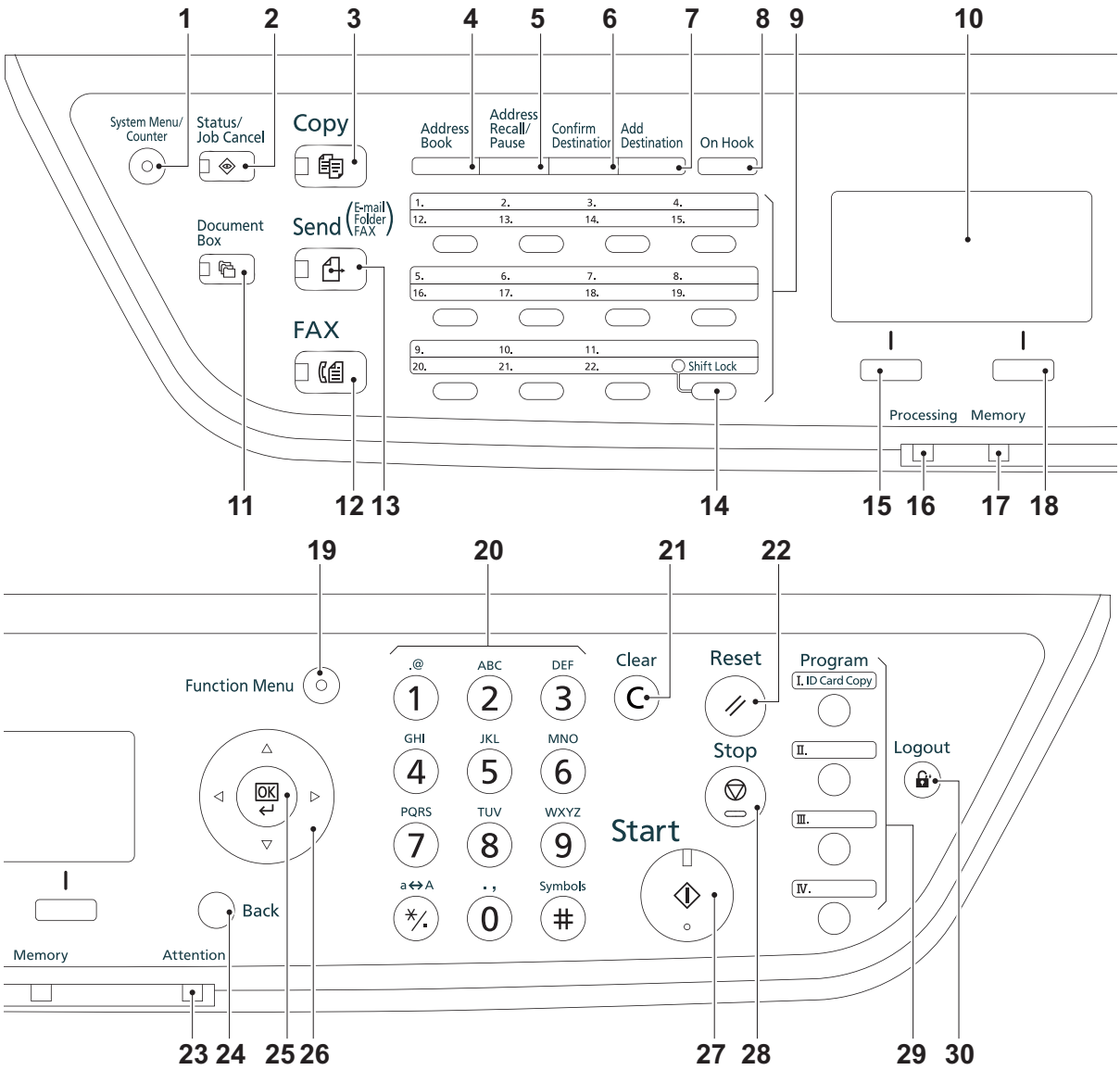

Figure 1-1-2

1. System menu/Counter key (LED)
2. Status/Job Cancel key (LED)
3. Copy key (LED)
4. Address Book key
5. Address Recall/Pause key *
6. Confirm Destination key
7. Add Destination key
8. On Hook key *
9. One-touch keys
10. Message display
11. Document Box key (LED)
12. FAX key (LED) *
13. Send key (LED)
14. Shift Lock key (LED)
15. Left Select key
16. Processing indicator
17. Memory indicator
18. Right Select key
19. Function Menu key (LED)
20. Numeric keys
21. Clear key
22. Reset key
23. Attention indicator
24. Back key
25. OK key
26. Cursor keys
27. Start key (LED)
28. Stop key
29. Program keys
30. Logout key (LED)

*: 4in1 model (with FAX) only

(3) Option

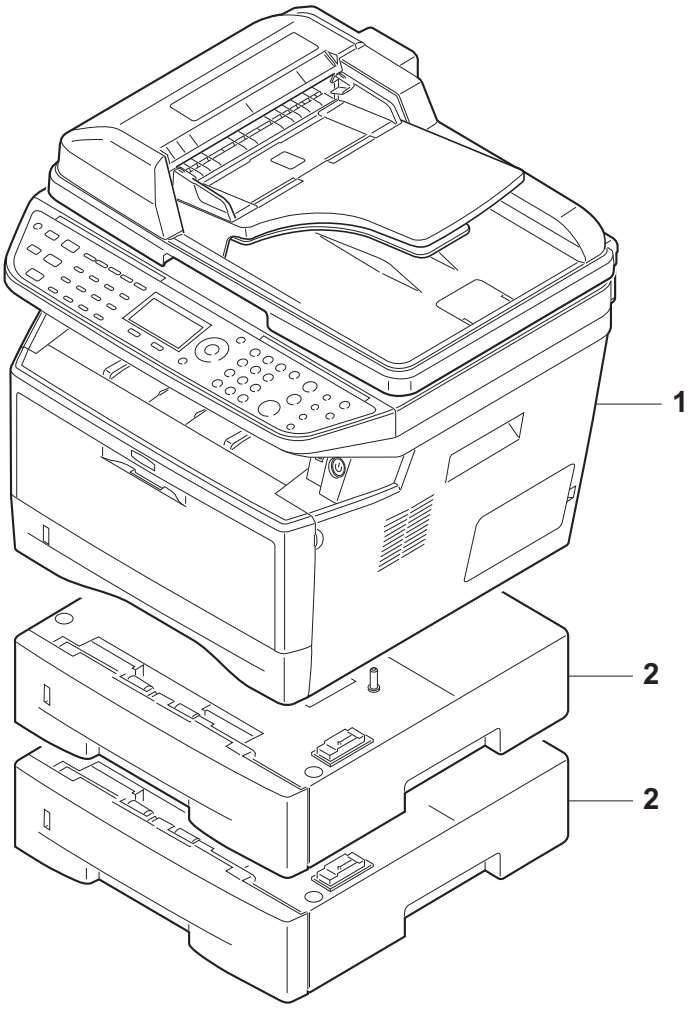

System Kit

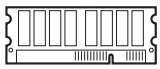

Expention memory: for copy and printer
General-purpose 144pin DIMM (1 slot)

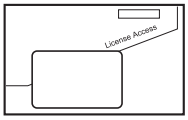

Card Authentication Kit(B)

Network interface Kit
IB-23
* 3in1 model only

Figure 1-1-3

1. Machine
2. Paper feeder

1-1-3 Machine cross section

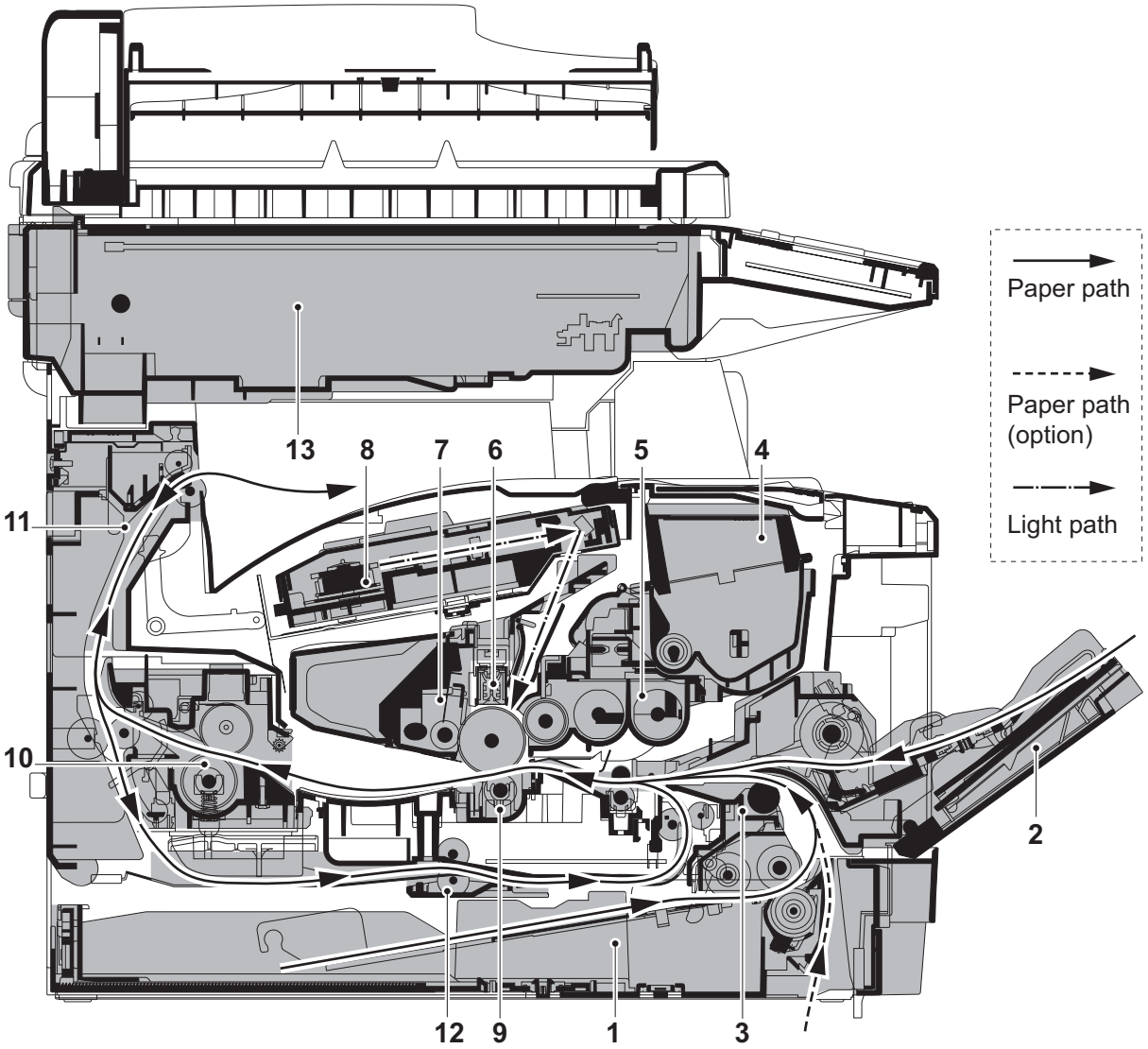

Figure 1-1-4

1. Cassette
2. MP tray
3. Paper feed/conveying section
4. Toner container
5. Developer unit
6. Main charger unit
7. Drum unit
8. Laser scanner unit (LSU)
9. Transfer/separation section
10. Fuser section
11. Exit section
12. Duplex/conveying section
13. Scanner section

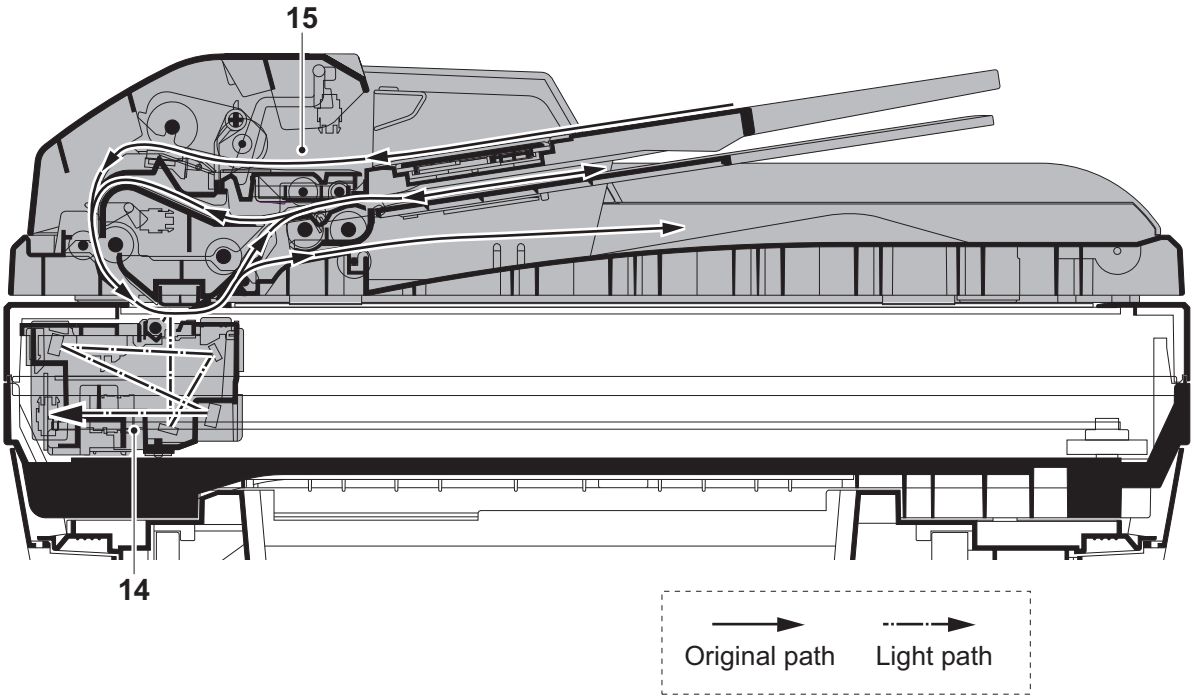

Figure 1-1-5

14. Image scanner unit (ISU)
15. Document processor (DP) *

* : Only model with Document Processor as standard

This page is intentionally left blank.

1-2-1 Installation environment

1. Temperature: 10 to 32.5°C/50 to 90.5°F
2. Humidity: 15 to 80%RH
3. Power supply: 120 V AC, 7.8 A
   220 - 240 V AC, 4.0 A
4. Power source frequency: 50 Hz ±0.3%/60 Hz ±0.3%
5. Installation location
   Avoid direct sunlight or bright lighting. Ensure that the photoconductor will not be exposed to direct sunlight or other strong light when removing paper jams.
   Avoid locations subject to high temperature and high humidity or low temperature and low humidity; an abrupt change in the environmental temperature; and cool or hot, direct air.
   Avoid places subject to dust and vibrations.
   Choose a surface capable of supporting the weight of the machine.
   Place the machine on a level surface (maximum allowance inclination: 1°).
   Avoid air-borne substances that may adversely affect the machine or degrade the photoconductor, such as mercury, acidic of alkaline vapors, inorganic gasses, NOx, SOx gases and chlorine-based organic solvents.
   Select a well-ventilated location.
6. Allow sufficient access for proper operation and maintenance of the machine.

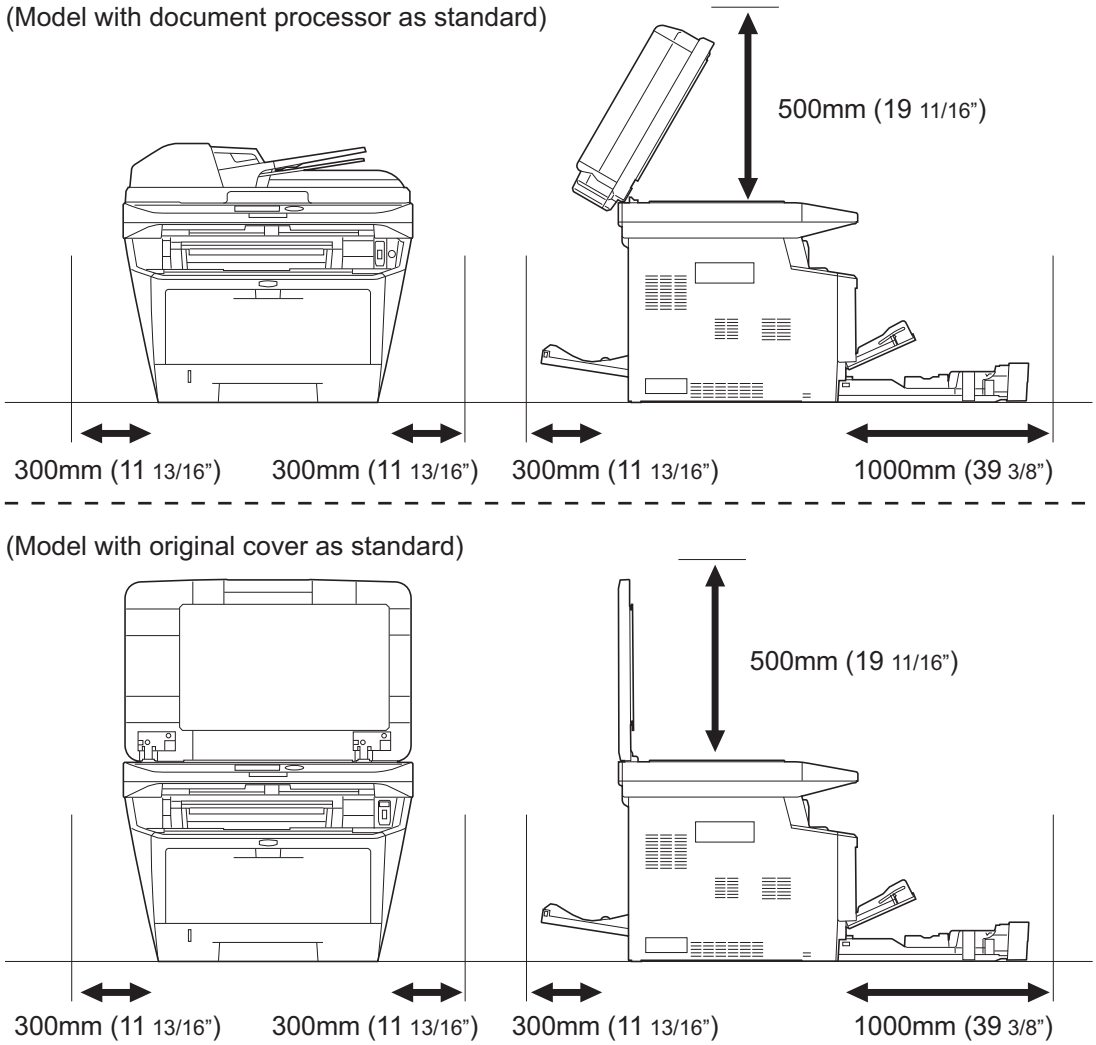

Figure 1-2-1

1-2-2 Unpacking

(1) Unpacking

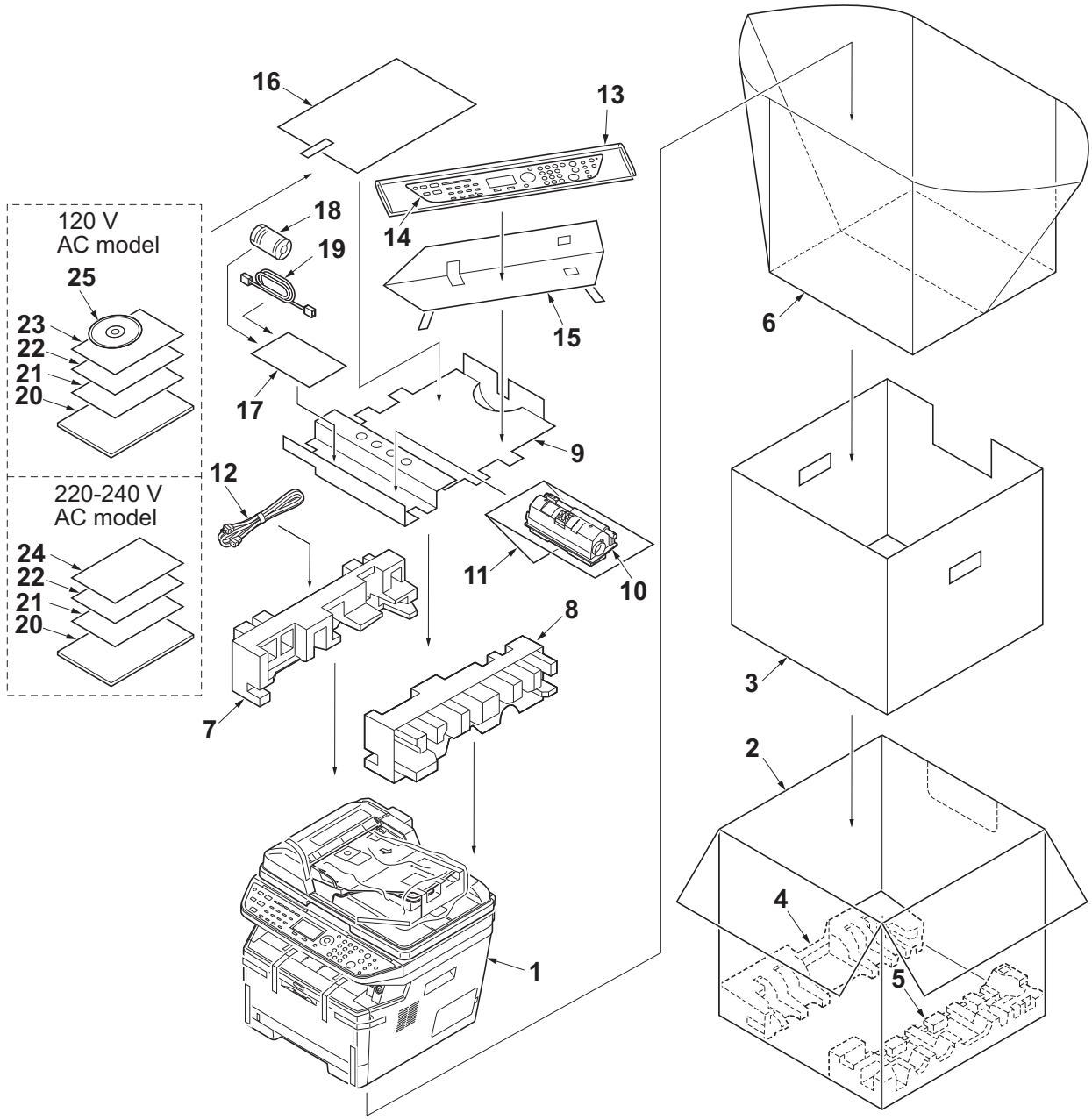

Figure 1-2-2

1. Machine
2. Outer case
3. Inner frame
4. Bottom pad L
5. Bottom pad R
6. Machine cover
7. Top pad L
8. Top pad R
9. Accessory spacer
10. Toner container
11. Plastic bag
12. Power cord
13. Plastic bag (250 ´ 600)
14. Operation labels
15. Operation label pad
16. Plastic bag (240 ´ 350)
17. Plastic bag
18. Ferrite core
19. Modular cable *
20. Quick installation guide
21. Safety guide 1
22. Safety guide 2
23. Toner OSHA leaflet *
24. EEA information leaflet **
25. DVD-ROM*

* 120 V AC model only.
** 220-240 V AC model only.

(2) Removing the tapes

<Procedure>

1. Remove two tapes.
2. Open the sheet.

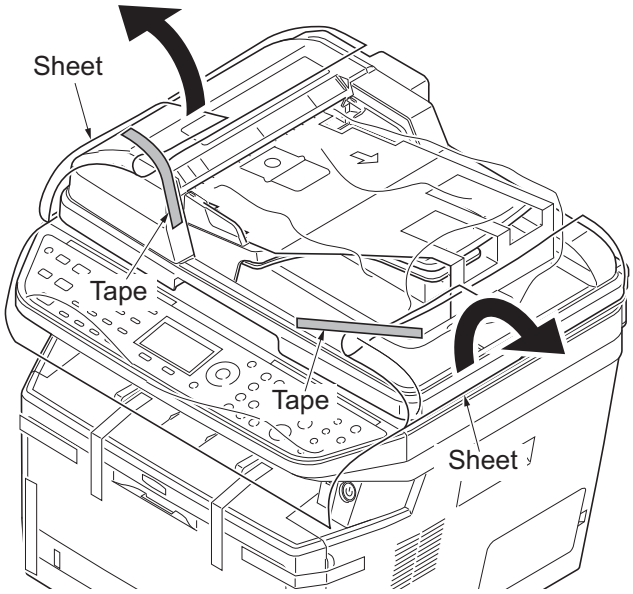

Figure 1-2-3

3. Remove two tapes A.
4. Open the top cover.
5. Remove the tape B and then remove the spacer.
6. Close the top cover.

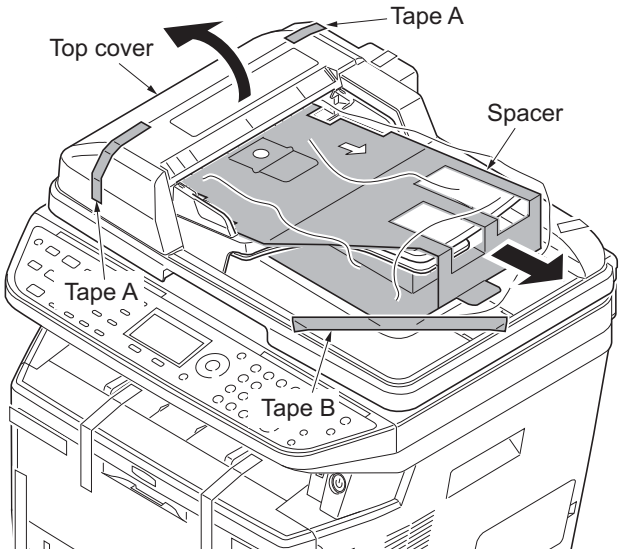

Figure 1-2-4

7. Remove two tapes.

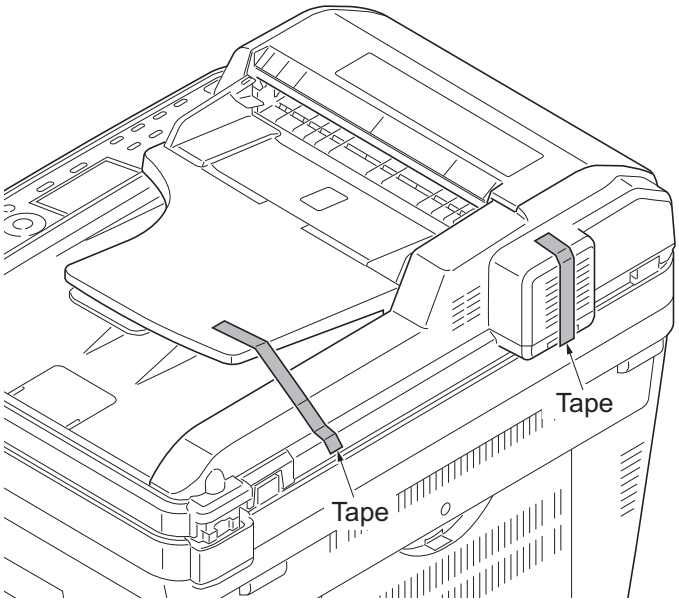

Figure 1-2-5

8. Open the DP.
9. Remove the sheet.
10. Remove the paper.

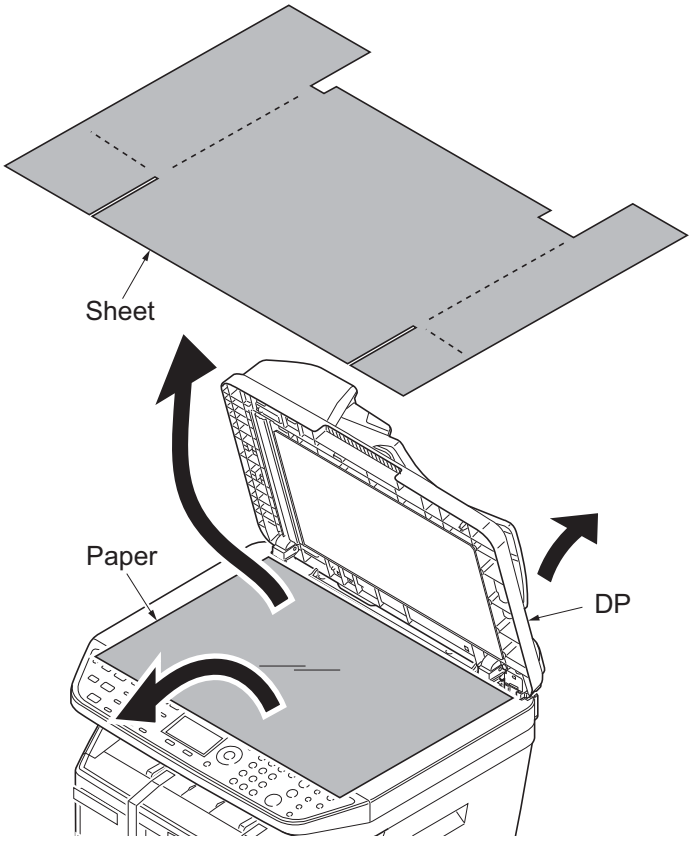

Figure 1-2-6

11. Remove the tape A.
12. Move the lock lever to the position of release.
    * : When turning on power if the lock lever is not released, the error message is displayed.
13. Close the DP.
14. Remove eight tapes B.

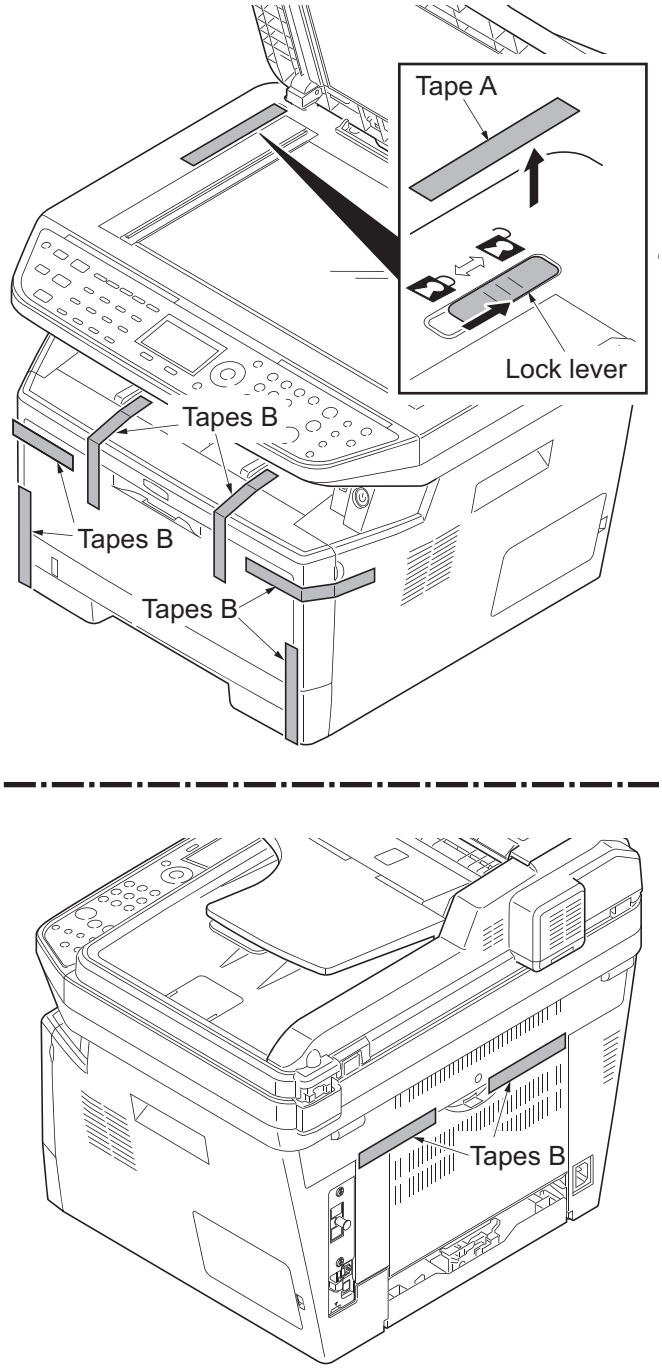

Figure 1-2-7

1-2-3 Installing the expansion memory (option)

<Procedure>

1. Turn off the power switch and pull out the power cable.
   Caution: Do not insert or remove expansion memory while machine power is on.
   Doing so may cause damage to the machine and the expansion memory.
2. Remove the right side cover.
3. Remove the screw.

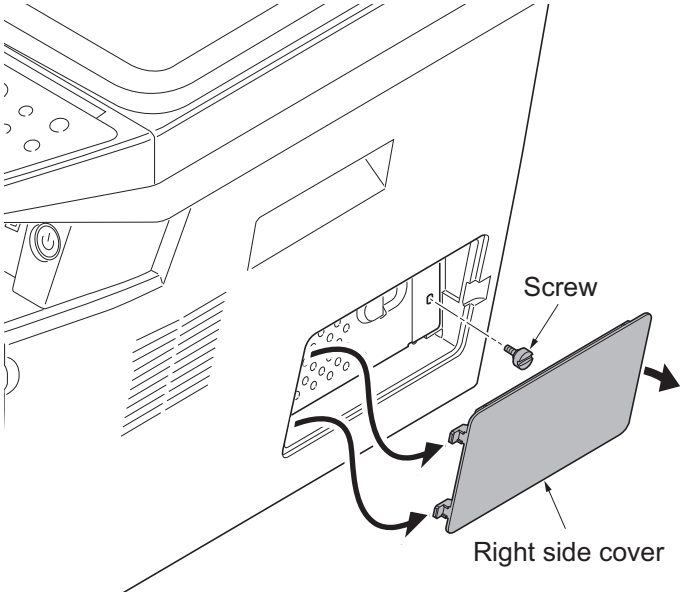

Figure 1-2-8

4. Open the memory slot cover.
5. Insert the expansion memory into the memory socket so that the notches on the memory align with the corresponding protrusions in the slot.
6. Close the memory slot cover.
7. Secure the screw.
8. Refit the right side cover.
9. Print a status page to check the memory expansion.
   If memory expansion has been properly performed, information on the installed memory is printed with the total memory capacity has been increased. Standard memory capacity 256 MB.

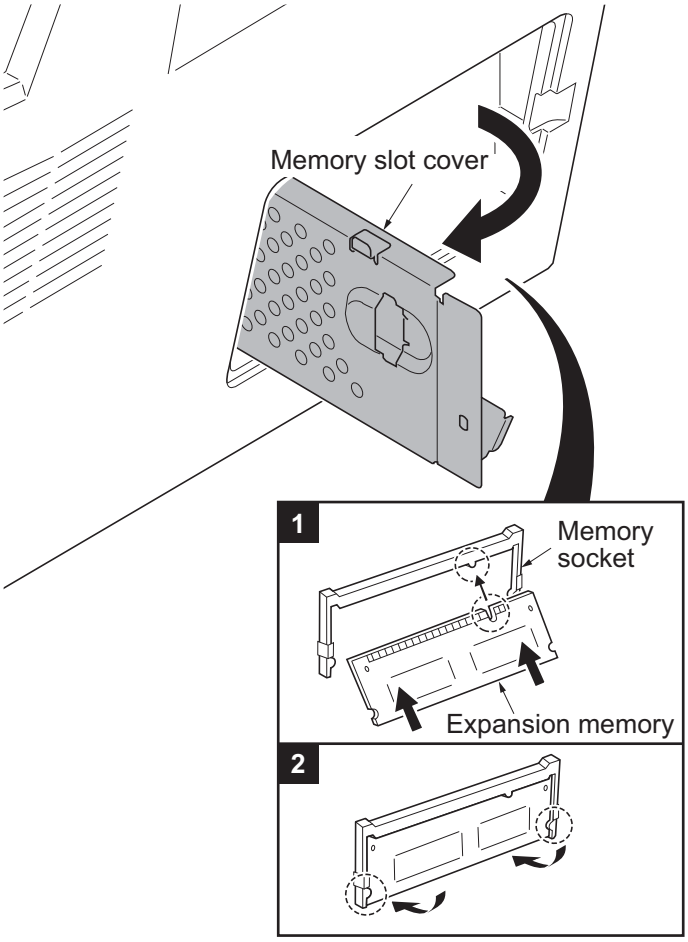

Figure 1-2-9

1-3-1 Maintenance mode

The machine is equipped with a maintenance function which can be used to maintain and service the machine.

(1) Executing a maintenance item

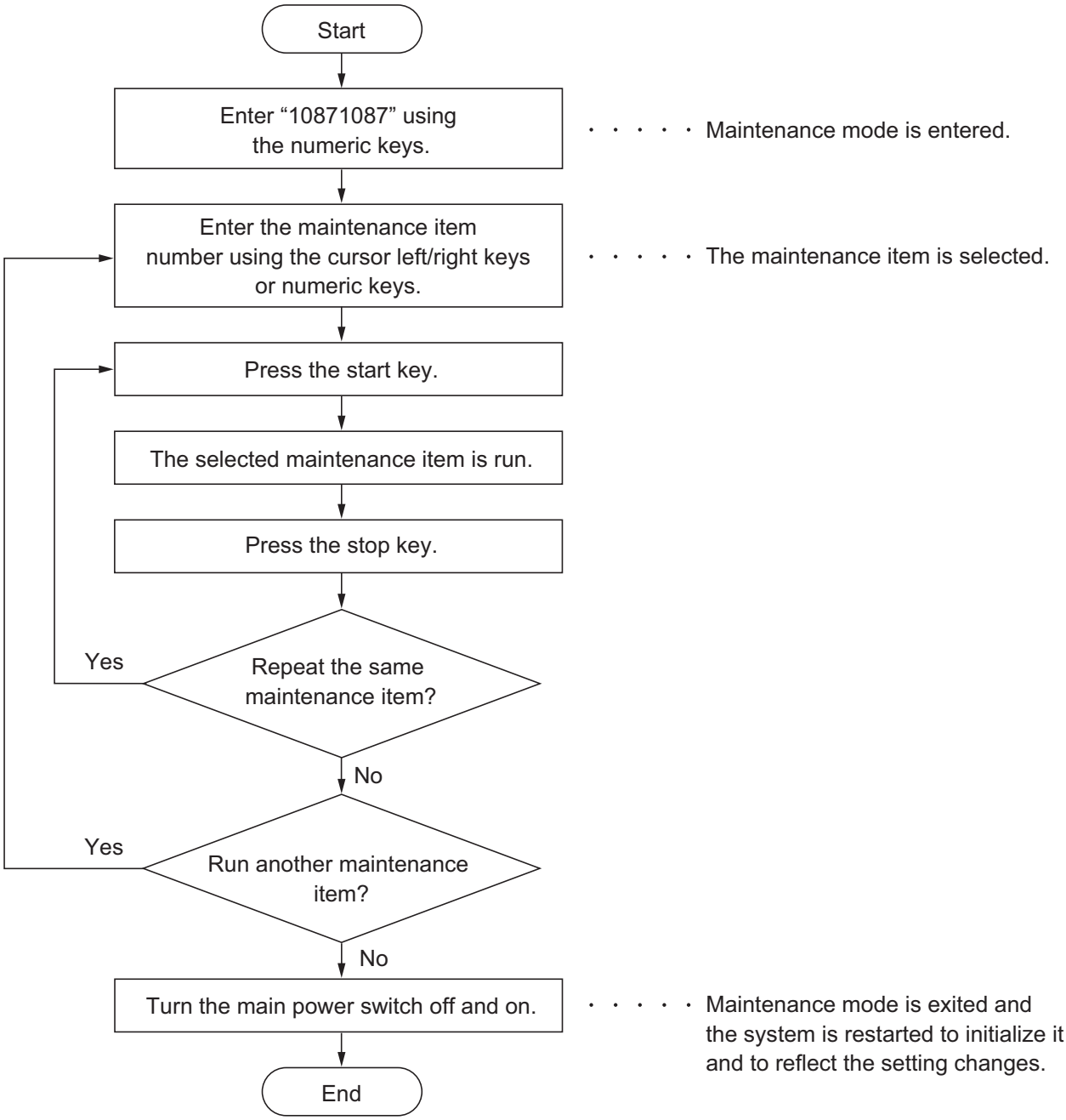

(2) Maintenance modes item list

Section	Item No.	Content of maintenance item	Initial setting
General	U000	Outputting an maintenance report	-
	U002	Setting the factory default data	-
	U004	Setting the machine number	-
Operation panel and support equipment	U203	Checking DP operation	-
	U222	Setting the IC card type	Other
Mode setting	U250	Setting the maintenance cycle	100000
	U251	Checking/clearing the maintenance count	-
	U252	Setting the destination	-
	U253	Switching between double and single counts	Double count
	U260	Selecting the timing for copy counting	EJECT
	U285	Setting service status page	ON
	U332	Setting the size conversion factor	1.0
	U345	Setting the value for maintenance due indication	0
Image processing	U411	Adjusting the scanner automatically	-
	U425	Setting the target	-
Fax	U600	Initializing all data	-
	U601	Initializing permanent data	-
	U603	Setting user data 1	DTMF
	U604	Setting user data 2	2 (120 V) 1 (220-240 V)
	U605	Clearing data	-
	U610	Setting system 1 Setting the number of lines to be ignored when receiving a fax at 100% magnification Setting the number of lines to be ignored when receiving a fax in the auto reduction mode Setting the number of lines to be ignored when receiving a fax (A4R/LetterR) in the auto reduction mode	 3 0 0
	U611	Setting system 2 Setting the number of adjustment lines for automatic reduction Setting the number of adjustment lines for automatic reduction when A4 paper is set Setting the number of adjustment lines for automatic reduction when letter size paper is set	 7 22 26
	U612	Setting system 3 Selecting if auto reduction in the auxiliary direction is to be performed Setting the automatic printing of the protocol list	 ON OFF

Section	Item No.	Content of maintenance item	Initial setting
Fax	U620	Setting the remote switching mode	ONE
	U625	Setting the transmission system 1 Setting the auto redialing interval Setting the number of times of auto redialing	 3 (120 V) 2 (220-240 V) 2 (120 V) 3 (220-240 V)
	U630	Setting communication control 1 Setting the communication starting speed Setting the reception speed Setting the waiting period to prevent echo problems at the sender Setting the waiting period to prevent echo problems at the receiver	 14400bps/V17 14400bps 300 75
	U631	Setting communication control 2 Setting ECM transmission Setting ECM reception Setting the frequency of the CED signal	 ON ON 2100
	U632	Setting communication control 3 Setting the DIS signal to 4 bytes Setting the short protocol transmission Setting the reception of a short protocol transmission Setting the CNG detection times in the fax/telephone auto select mode	 OFF ON ON 2TIME
	U633	Setting communication control 4 Enabling/disabling V.34 communication Setting the V.34 symbol speed (3429 Hz) Setting the number of times of DIS signal reception Setting the reference for RTN signal output	 ON ON ONCE 15%
	U634	Setting communication control 5	0
	U640	Setting communication time 1 Setting the one-shot detection time for remote switching Setting the continuous detection time for remote switching	 7 80
	U641	Setting communication time 2 Setting the T0 time-out time Setting the T1 time-out time Setting the T2 time-out time Setting the Ta time-out time Setting the Tb1 time-out time Setting the Tb2 time-out time Setting the Tc time-out time Setting the Td time-out time	 56 36 69 30 20 80 60 9 (120 V) 6 (220-240 V)
	U650	Setting modem 1 Setting the G3 transmission cable equalizer Setting the G3 reception cable equalizer Setting the modem detection level	 0dB 0dB 43dBm

Section	Item No.	Content of maintenance item	Initial setting
Fax	U651	Setting modem 2 Modem output level DTMF output level (main value) DTMF output level (level difference)	 9 (120 V) 10 (220-240 V) 5 (120 V) 10.5 (220-240 V) 2 (120 V) 2.5 (220-240 V)
	U660	Setting the NCU Setting the connection to PBX/PSTN Setting PSTN dial tone detection Setting busy tone detection Setting for a PBX Setting the loop current detection before dialing	 PSTN ON ON LOOP ON
	U670	Outputting lists	-
	U695	FAX function customize	ON/OFF
	U699	Setting the software switches	-
Others	U910	Clearing the black ratio data	-
	U917	Setting backup data reading/writing	-
	U927	Clearing the all copy counts and machine life counts (one time only)	-
	U977	Data capture mode	-

(3) Contents of the maintenance mode items

Item No.	Description
U000	**Outputting an maintenance report** **Description** Outputs lists of the current settings of the maintenance items and paper jam and service call occurrences. Outputs the event log. Also sends output data to the USB memory. Printing a report is disabled either when a job is remaining in the buffer or when [Pause All Print Jobs] is pressed to halt printing. **Purpose** To check the current setting of the maintenance items, or paper jam or service call occurrences. Before initializing or replacing the backup RAM, output a list of the current settings of the maintenance items to reenter the settings after initialization or replacement. **Method** 1. Press the start key. 2. Select the item to be output using the cursor up/down keys. **Display** / **Output list** MAINTENANCE — List of the current settings of the maintenance modes EVENT — Outputs the event log ALL — Outputs the all reports 3. Press the start key. A list is output. **Method: Send to the USB memory** 1. Turn the power switch off. 2. Insert USB memory in USB memory slot. 3. Turn the power switch on. 4. Enter the maintenance item. 5. Press the start key. 6. Select the item to be send. 7. Select [TEXT] or [HTML]. **Display** / **Output list** Print — Outputs the report USB (TEXT) — Sends output data to the USB memory (text type) USB (HTML) — Sends output data to the USB memory (HTML type) 8. Press the start key. Output will be sent to the USB memory. **Completion** Press the stop key. The screen for selecting a maintenance item No. is displayed.

Item No.	Description
U000	**Event log**

Event Log

MFP

(2) 06/Apr/2010 08:40

(1) Firmware Version 2MH_2000.000.000 2010.04.06

(3) [XXXXXXXX] (4) [XXXXXXXX] (5) [XXXXXXXX]

(7) Paper Jam Log

#	Count.	Event Descriprions
16	1876543	1000.01.08.01.01
15	166554	1000.01.08.01.02
14	4988	1000.01.08.01.01
13	4988	1000.01.08.01.02
12	4988	1000.01.08.01.01
11	4988	1000.01.08.01.02
10	1103	1000.01.08.01.01
9	1103	1000.01.08.01.02
8	1103	1000.01.08.01.01
7	1103	1000.01.08.01.02
6	1027	1000.01.08.01.01
5	1027	1000.01.08.01.02
4	1027	1000.01.08.01.01
3	1027	1000.01.08.01.02
2	406	1000.01.08.01.01
1	36	1000.01.08.01.02

1000.01.08.01.01
(a) (b) (c) (d) (e)

(8) Service Call Log

#	Count.	Service Code
8	1881214	01.0030
7	178944	01.1010
6	5296	01.4000
5	5295	01.3100
4	2099	01.2000
3	1054	01.2000
2	809	01.2500
1	30	01.2500

(9) Maintenance Log

#	Count.	Item
8	1045571	01.00
7	104511	01.00
6	7045	01.00
5	3454	01.00
4	3454	02.00
3	3454	02.00
2	417	02.00
1	34	02.20

(10) Unknown Toner Log

#	Count.	Item
5	3454	01.00
4	3454	01.00
3	3454	01.00
2	406	01.00
1	32	01.00

(11) Counter Log

(f)		(g)		(h)
J0010:000	J0030:000	C0030:001	C2000:001	M00:01
J0011:000	J0031:000	C0070:001	C2200:001	M00:01
J0012:000	J0032:000	C0100:001	C3100:001	
J0020:000	J0040:000	C0120:001	C3200:001	
J0021:002	J0041:002	C0130:001	C3300:001	
.	.	.	.	
.	.	.	.	
.	.	.	.	
.	.	.	.	
.	.	.	.	
.	.	.	.	

(6) [XXXXXXXXXXXXXXXX]

Figure 1-3-1

Item No.	Description
U000	**Detail of event log**

No.	Items	Description		
(1)	System version			
(2)	System date			
(3)	Engine soft version			
(4)	Engine boot version			
(5)	Operation panel mask version			
(6)	Machine serial number			
(7)	Paper Jam Log	#	Count.	Event
		Remembers 1 to 16 of occurrence. If the occurrence of the previous paper jam is less than 16, all of the paper jams are logged. When the occurrence excesseds 16, the oldest occurrence is removed.	The total page count at the time of the paper jam.	Log code (2 digit, hexadecimal, 5 categories) (a) Cause of a paper jam (b) Paper source (c) Paper size (d) Paper type (e) Paper eject
		(a) Cause of paper jam (Hexadecimal)		
		Refer to page 1-4-2 for paper jam location 0100: Secondary paper feed request time out 0101: Waiting for process package to be ready 0105: Warm up request time out 0107: Waiting for fuser package to be ready 0110: Top cover open 0501: No paper feed from cassette 1 0502: No paper feed from cassette 2 0503: No paper feed from cassette 3 0508: No paper feed from duplex section 0509: No paper feed from MP tray 0511: Multiple sheets in cassette 1 0512: Multiple sheets in cassette 2 0513: Multiple sheets in cassette 3 0518: Multiple sheets in duplex section 0519: Multiple sheets in MP tray 1403: PF feed sensor 1 non arrival jam (cassette 3) 1413: PF feed sensor 1 stay jam (cassette 3) 1420: PF feed sensor 1 initial jam (Warm up) 1620: PF feed sensor 2 initial jam (Warm up) 4002: Registration sensor non arrival jam (cassette 2) 4003: Registration sensor non arrival jam (cassette 3) 4012: Registration sensor stay jam (cassette 2) 4013: Registration sensor stay jam (cassette 3) 4020: Registration sensor initial jam (Warm up) 4201: Eject sensor non arrival jam (cassette 1) 4202: Eject sensor non arrival jam (cassette 2) 4203: Eject sensor non arrival jam (cassette 3)		

Item No.	Description
U000	

No.	Items	Description
(7) cont.	Paper Jam Log	4208: Eject sensor non arrival jam (duplex) 4209: Eject sensor non arrival jam (Mp tray) 4211: Eject sensor stay jam (cassette 1) 4212: Eject sensor stay jam (cassette 2) 4213: Eject sensor stay jam (cassette 3) 4218: Eject sensor stay jam (duplex) 4219: Eject sensor stay jam (MP tray) 4220: Eject sensor initial jam (Warm up) 4301: Duplex sensor non arrival jam (cassette 1) 4302: Duplex sensor non arrival jam (cassette 2) 4303: Duplex sensor non arrival jam (cassette 3) 4308: Duplex sensor non arrival jam (duplex) 4309: Duplex sensor non arrival jam (MP tray) 4311: Duplex sensor stay jam (cassette 1) 4312: Duplex sensor stay jam (cassette 2) 4313: Duplex sensor stay jam (cassette 3) 4318: Duplex sensor stay jam (duplex) 4319: Duplex sensor stay jam (MP tray) 9000: No original feed 9001: DP original conveying jam 9003: DP original swichback non arrival jam 9004: DP original swichback stay jam 9011: DP top cover open 9410: DP timing sensor stay jam
		(b) Detail of paper source (Hexadecimal)
		00: MP tray 01: Cassette 1 02: Cassette 2 (paper feeder 1) 03: Cassette 3 (paper feeder 2) 04: Cassette 4 (paper feeder 3) 05 to 09: Reserved

Item No.	Description
U000	

No.	Items	Description		
(7) cont.	Paper Jam Log	(c) Detail of paper size (Hexadecimal)		
		00: (Not specified) 01: Monarch 02: Business 03: International DL 04: International C5 05: Executive 06: Letter-R 86: Letter-E 07: Legal 08: A4R 88: A4E 09: B5R 89: B5E 0A: A3	0B: B4 0C: Ledger 0D: A5R 0E: A6 0F: B6 10: Commercial #9 11: Commercial #6 12: ISO B5 13: Custom size 1E: C4 1F: Postcard 20: Reply-paid post-card 21: Oficio II	22: Special 1 23: Special 2 24: A3 wide 25: Ledger wide 26: Full bleed paper (12 x 8) 27: 8K 28: 16K-R 2A: 216x340mm A8: 16K-E 32: Statement-R B2: Statement-E 33: Folio 34: Western type 2 35: Western type 4
		(d) Detail of paper type (Hexadecimal)		
		01: Plain 02: Transparency 03: Preprinted 04: Labels 05: Bond 06: Recycled 07: Vellum 08: Rough 09: Letterhead	0A: Color 0B: Prepunched 0C: Envelope 0D: Cardstock 0E: Coated 0F: 2nd side 10: Media 16 11: High quality	15: Custom 1 16: Custom 2 17: Custom 3 18: Custom 4 19: Custom 5 1A: Custom 6 1B: Custom 7 1C: Custom 8
		(e) Detail of paper eject location (Hexadecimal)		
		01: Face down (FD)		
(8)	Service Call Log	#	Count.	Service Code
		Remembers 1 to 8 of occurrence of self diagnostics error. If the occurrence of the previous diagnostics error is less than 8, all of the diagnostics errors are logged.	The total page count at the time of the self diagnostics error.	Self diagnostic error code (See page 1-4-4) Example: 01.6000 01: Self diagnostic error 6000: Self diagnostic error code number

Item No.	Description
U000	

No.	Items	Description		
(9)	Maintenance Log	#	Count.	Item
		Remembers 1 to 8 of occurrence of replacement. If the occurrence of the previous replacement of toner container is less than 8, all of the occurrences of replacement are logged.	The total page count at the time of the replacement of the toner container.	Code of maintenance replacing item (1 byte, 2 categories) First byte (Replacing item) 01: Toner container 02: Maintenance kit Second byte (Type of replacing item) 00: Black 01: MK-1130/1140 MK-1132/1142
(10)	Unknown Toner Log	#	Count.	Item
		Remembers 1 to 5 of occurrence of unknown toner detection. If the occurrence of the previous unknown toner detection is less than 5, all of the unknown toner detection are logged.	The total page count at the time of the [Toner Empty] error with using an unknown toner container.	Unknown toner log code (1 byte, 2 categories) First byte 01: Fixed (Toner container) Second byte 00: Fixed (Black)
(11)	Counter Log Comprised of three log counters including paper jams, self diagnostics errors, and replacement of the toner container.	(f) Paper jam	(g) Self diagnostic error	(h) Maintenance item replacing
		Indicates the log counter of paper jams depending on location. Refer to Paper Jam Log. All instances including those are not occurred are displayed.	Indicates the log counter of self diagnostics errors depending on cause. (See page 1-4-4) Example: C6000: 4 Self diagnostics error 6000 has happened four times.	Indicates the log counter depending on the maintenance item for maintenance. T: Toner container 00: Black M: Maintenance kit 00: MK-1130/1140 MK-1132/1142 Example: T00: 1 The toner container has been replaced once.

Item No.	Description
U002	**Setting the factory default data** **Description** Restores the machine conditions to the factory default settings. **Purpose** To move the image scanner unit to the home position. (position in which the frame can be fixed). **Method** 1. Press the start key. 2. Select [MODE1(ALL)] using the cursor up/down keys. 3. Press the start key. The imege scanner returns to the home position. 4. Turn the power switch off and on. * : An error code is displayed in case of an initialization error. When errors occurred, turn power switch off then on, and execute initialization using maintenance item U002. **Error codes** **Codes** / **Description** 0001 / Controller error 0020 / Engine error 0040 / Scanner error
U004	**Setting the machine number** **Description** Sets or displays the machine number. **Purpose** To check or set the machine number. **Method** 1. Press the start key. If the machine serial number of engine PWB matches with that of main PWB **Display** / **Operation** MACHINE No. / Displays the machine serial number If the machine serial number of engine PWB does not match with that of main PWB **Display** / **Operation** MACHINE No. (MAIN) / Displays the machine serial number of main MACHINE No. (ENG) / Displays the machine serial number of engine **Setting** Carry out if the machine serial number does not match. 1. Press [EXECUTE]. 2. Press the start key. Writing of serial No. starts. **Completion** Press the stop key. The screen for selecting a maintenance item No. is displayed.

Item No.	Description
U203	**Checking DP operation** **Description** Simulates the original conveying operation separately in the DP. **Purpose** To check the DP operation. **Method** 1. Press the start key. 2. Place an original in the DP if running this simulation with paper. 3. Select the speed to be operated using the cursor up/down keys. **Display** / **Description** NORMAL SPEED — Normal reading (600 dpi) HIGH SPEED — High-speed reading 4. Press the start key. 5. Select the item to be operated using the cursor up/down keys. **Display** / **Description** CCD ADP (NON P) — Without paper, single-sided original of CCD (continuous operation) CCD ADP — With paper, single-sided original of CCD CCD RADP (NON P) — Without paper, double-sided original of CCD (continuous operation) CCD RADP — With paper, double-sided original of CCD 6. Press the start key. The operation starts. 7. To stop continuous operation, press the stop key. **Completion** Press the stop key. The screen for selecting a maintenance item No. is displayed.

<table>
<tr><th>Item No.</th><th>Description</th></tr>
<tr><td>U222</td><td>

Setting the IC card type

Description
Sets the type of IC card.
Purpose
To change the type of IC card.

Setting
1. Press the start key.
2. Select the item using the cursor up/down keys.

Display	Description
OTHER	The type of IC card is SSFC.
SSFC	The type of IC card is not SSFC.

* : Initial setting: OTHER

3. Press the start key. The setting is set.

Completion
Press the stop key. The screen for selecting a maintenance item No. is displayed.

</td></tr>
<tr><td>U250</td><td>

Setting the maintenance cycle

Description
Displays, clears and changes the maintenance cycle.
Purpose
To check and change the maintenance cycle.

Method
1. Press the start key. The currently set maintenance cycle is displayed.

Setting
1. Select [M.CNT A] using the cursor up/down keys.
2. Change the setting using the cursor left/right keys or numeric keys.

Description	Setting range	Initial setting
Maintenance cycle	0 to 9999999	100000

3. Press the start key. The value is set.

Clearing
1. Select [CLEAR] using the cursor up/down keys.
2. Press the start key. The count is cleared.

Completion
Press the stop key. The screen for selecting a maintenance item No. is displayed.

</td></tr>
</table>

Item No.	Description
U251	**Checking/clearing the maintenance count** **Description** Displays, clears and changes the maintenance count. **Purpose** To check the maintenance count. Also to clear the count during maintenance service (replacing the maintenance kit). **Method** 1. Press the start key. The maintenance count is displayed. **Setting** 1. Select [M.CNT A] using the cursor up/down keys. 2. Change the setting using the cursor left/right keys or numeric keys. **Description** | **Setting range** | **Initial setting** Maintenance count | 0 to 9999999 | 0 3. Press the start key. The count is set. **Clearing** 1. Select [CLEAR] using the cursor up/down keys. 2. Press the start key. The count is cleared. **Completion** Press the stop key. The screen for selecting a maintenance item No. is displayed.

Item No.	Description
U252	**Setting the destination** **Description** Switches the operations and screens of the machine according to the destination. **Purpose** To be executed after initializing the backup RAM, in order to return the setting to the value before replacement or initialization. **Setting** 1. Press the start key. 2. Select the destination using the cursor up/down keys. **Display** / **Description** INCH — Inch (North America) specifications EUROPE METRIC — Metric (Europe) specifications ASIA PACIFIC — Metric (Asia Pacific) specifications AUSTRALIA — Australia specifications CHINA — China specifications KOREA — Korea specifications 3. Press the start key. 4. Turn the power switch off and on.
U253	**Switching between double and single counts** **Description** Switches the count system for the total counter and other counters. **Purpose** Used to select, according to the preference of the user (copy service provider), if folio size paper is to be counted as one sheet (single count) or two sheets (double count). **Setting** 1. Press the start key. 2. Select the count system using the cursor up/down keys. **Display** / **Description** SGL COUNT(ALL) — Single count for all size paper DBL COUNT(FOLIO) — Double count for Folio size or larger * : Initial setting: DBL COUNT(FOLIO) 3. Press the start key. The setting is set. **Completion** Press the stop key. The screen for selecting a maintenance item No. is displayed.

<table>
<tr><th>Item No.</th><th>Description</th></tr>
<tr><td>U260</td><td>

Selecting the timing for copy counting

Description
Changes the copy count timing for the total counter and other counters.
Purpose
To be set according to user request.

Setting
1. Press the start key.
2. Select the copy count timing using the cursor up/down keys.

Display	Description
FEED	When secondary paper feed starts
EJECT	When the paper is ejected

* : Initial setting: EJECT

3. Press the start key. The setting is set.

Completion
Press the stop key. The screen for selecting a maintenance item No. is displayed.

</td></tr>
<tr><td>U285</td><td>

Setting service status page

Description
Determines displaying the digital dot coverage report on reporting.
Purpose
According to user request, changes the setting.

Setting
1. Press the start key.
2. Select ON or OFF using the cursor up/down keys.

Display	Description
ON	Displays the digital dot coverage
OFF	Not to display the digital dot coverage

* : Initial setting: ON

3. Press the start key. The setting is set.

Completion
Press the stop key. The screen for selecting a maintenance item No. is displayed.

</td></tr>
</table>

<table>
<tr><th>Item No.</th><th>Description</th></tr>
<tr><td>U332</td><td>

Setting the size conversion factor

Description
Sets the coefficient of nonstandard sizes in relation to the A4/Letter size. The coefficient set here is used to convert the black ratio in relation to the A4/Letter size and to display the result in user simulation.
Purpose
To set the coefficient for converting the black ratio for nonstandard sizes in relation to the A4/Letter size.

Setting
1. Press the start key.
2. Change the setting using the cursor left/right keys or numeric keys.

Display	Description	Setting range	Initial setting
CALC.RATE	Size parameter	0.1 to 3.0	1.0

3. Press the start key. The value is set.

Completion
Press the stop key. The screen for selecting a maintenance item No. is displayed.

</td></tr>
<tr><td>U345</td><td>

Setting the value for maintenance due indication

Description
Sets when to display a message notifying that the time for maintenance is about to be reached, by setting the number of copies that can be made before the current maintenance cycle ends. When the difference between the number of copies of the maintenance cycle and that of the maintenance count reaches the set value, the message is displayed.
Purpose
To change the time for maintenance due indication.

Setting
1. Press the start key.
2. Select [COUNT] using the cursor up/down keys.
3. Change the setting using the cursor left/right keys.

Description	Setting range	Initial setting
Time for maintenance due indication (Remaining number of copies that can be made before the current maintenance cycle ends)	0 to 9999	0

4. Press the start key. The value is set.

Clearing
1. Select [CLEAR] using the cursor up/down keys.
2. Press the start key. The value is cleared.

Completion
Press the stop key. The screen for selecting a maintenance item No. is displayed.

</td></tr>
</table>

Item No.	Description
U411	**Adjusting the scanner automatically** **Description** Uses a specified original and automatically adjusts the following items in the scanner and the DP scanning sections. Scanner section: Original size magnification, leading edge timing, center line, input gamma, input gamma in monochrome mode and matrix DP scanning section: Original size magnification, leading edge timing, center line **Purpose** To perform automatic adjustment of various items in the scanner and the DP scanning sections. **Method** 1. Press the start key. 2. Select the item. The screen for executing is displayed.

Display	Description	Original to be used for adjustment (P/N)
ALL	Performs automatic adjustment in the DP scanning section following automatic adjustment in the scanner section	302FZ56990/ 303LJ57010
ADJUST TABLE	Automatic adjustment in the scanner section	302FZ56990
ADJUST DP	Automatic adjustment in the DP scanning section:	303LJ57010

Method: TABLE

1. Enter the target values which are shown on the specified original (P/N: 302FZ56990) executing maintenance item U425.
2. Set a specified original (P/N: 302FZ56990) on the platen.
3. Enter maintenance item U411.
4. Select [ADJUST TABLE] using the cursor up/down keys.
5. Press the start key. Auto adjustment starts.
6. When automatic adjustment has normally completed, [OK] is displayed. If a problem occurs during auto adjustment, [NG XX] (XX is replaced by an error code) is displayed and operation stops. Should this happen, determine the details of the problem and repeat the procedure from the beginning.
7. To return to the screen for selecting an item, press the stop key.

Method: DP

1. Select [ADJUST DP] using the cursor up/down keys.
2. Set a specified original (P/N: 303LJ57010) in the DP.
3. Press the start key. Auto adjustment starts.
4. When automatic adjustment has normally completed, [OK] is displayed. If a problem occurs during auto adjustment, [NG XX] (XX is replaced by an error code) is displayed and operation stops. Should this happen, determine the details of the problem and repeat the procedure from the beginning.
5. To return to the screen for selecting an item, press the stop key.

Item No.	Description
U411	**Error Codes**

Codes	Description
01	Black band detection error (scanner leading edge registration)
02	Black band detection error (scanner center line)
03	Black band detection error (scanner main scanning direction magnification)
04	Black band is not detected (scanner leading edge registration)
05	Black band is not detected (scanner center line)
06	Black band is not detected (scanner main scanning direction magnification)
07	Black band is not detected (scanner auxiliary scanning direction magnification)
08	Black band is not detected (DP main scanning direction magnification far end)
09	Black band is not detected (DP main scanning direction magnification near end)
0a	Black band is not detected (DP auxiliary scanning direction magnification leading edge)
0b	Black band is not detected (DP auxiliary scanning direction magnification leading edge original check)
0c	Black band is not detected (DP auxiliary scanning direction trailing edge)
0d	Black band is not detected (DP auxiliary scanning direction trailing edge 2)
0e	DMA time out
0f	Auxiliary scanning direction magnification error
10	Auxiliary scanning direction leading edge detection error
11	Auxiliary scanning direction trailing edge detection error
12	Auxiliary scanning direction skew 1.5 error
13	Maintenance request error
14	Main scanning direction center line error
15	Main scanning direction skew 1.5 error
16	Main scanning direction magnification error
17	Service call error
18	DP paper misfeed error
19	PWB replacement error
1a	Original error

Completion

Press the stop key. The screen for selecting a maintenance item is displayed.

Item No.	Description
U425	**Setting the target** **Description** Enters the lab values that is indicated on the back of the chart (P/N: 302FZ56990) used for adjustment. **Purpose** Performs data input in order to correct for differences in originals during automatic adjustment. **Method** 1. Press the start key. 2. Select the item to be set using the cursor up/down keys.

Display	Description
N875	Setting the N875 patch for the original for adjustment
N475	Setting the N475 patch for the original for adjustment
N125	Setting the N125 patch for the original for adjustment
CYAN	Setting the cyan patch for the original for adjustment
MAGENTA	Setting the magenta patch for the original for adjustment
YELLOW	Setting the yellow patch for the original for adjustment
RED	Setting the red patch for the original for adjustment
GREEN	Setting the green patch for the original for adjustment
BLUE	Setting the blue patch for the original for adjustment
ADJUST ORIGINAL	Setting the main and auxiliary scanning directions

3. Select the item to be set using the cursor up/down keys.

Display	Description	Setting range
L	Setting the L value	0.0 to 100.0
a	Setting the a value	-200.0 to 200.0
b	Setting the b value	-200.0 to 200.0

4. Enters the value that is indicated on the back of the chart using the cursor left/right keys or numeric keys.
5. Press the start key. The value is set.

Item No.	Description
U425	**Setting: [ADJUST ORIGINAL]** 1. Measure the distance from the left edge to the black belt (a) of the original at A, B and C. Measurement procedure 1) Measure the distance from the edge to the black belt (a) of the original at A (30 mm from the leading edge), B (148.5 mm from the leading edge) and C (267 mm from the leading edge), respectively. 2) Apply the following formula for the values obtained: ((A + C) / 2 + B) / 2 2. Enter the values solved using the cursor left/right keys or numeric keys in [MAIN]. 3. Press the start key. The value is set. 4. Measure the distance from the leading edge to the black belt (b) of the original at D, E and F. Measurement procedure 1) Measure the distance from the edge to the black belt (b) of the original at D (35 mm from the left edge), E (110 mm from the left edge) and F (185 mm from the left edge), respectively. 2) Apply the following formula for the values obtained: ((D + F) / 2 + E) / 2 5. Enter the values solved using the cursor left/right keys or numeric keys in [SUB LEAD]. 6. Press the start key. The value is set. 7. Measure the length (G) from the edge of the black belt (b) to edge of the black belt (c) of the original. 8. Enter the measured value using the cursor left/right keys or numeric keys in [SUB TAIL]. 9. Press the start key. The value is set. 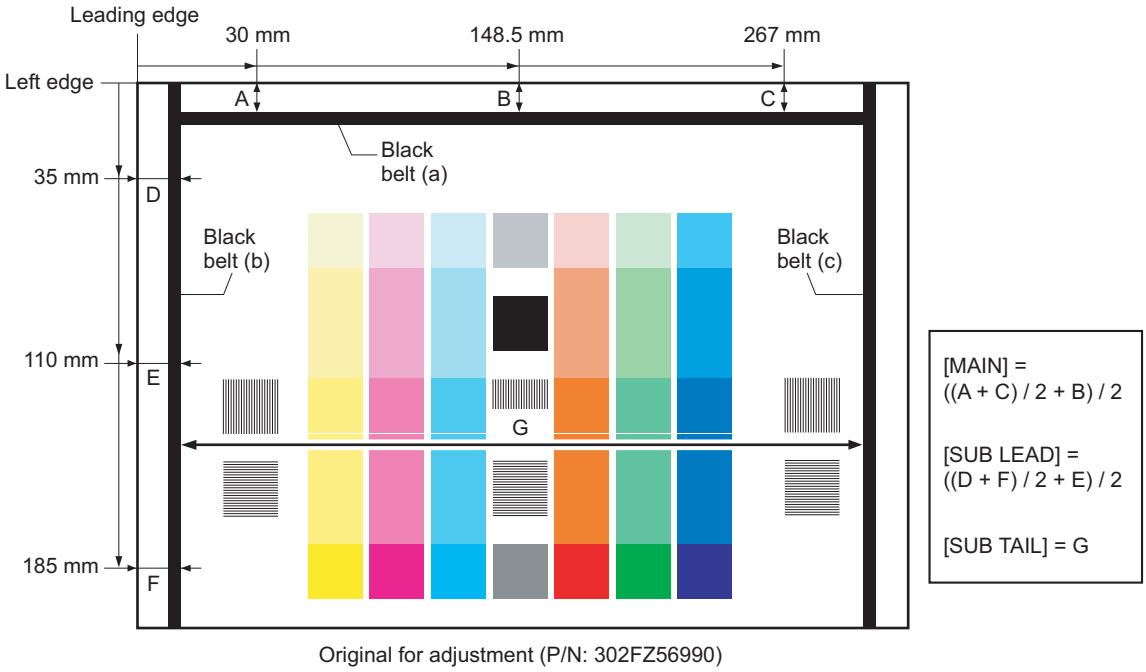 Original for adjustment (P/N: 302FZ56990) **Figure 1-3-2** **Completion** Press the stop key. The screen for selecting a maintenance item No. is displayed.

Item No.	Description
U600	**Initializing all data**

Description
Initializes software switches and all data in the backup data on the FAX control PWB, according to the destination and OEM.
Executes the check of the file system, when abnormality of the file system is detected, initializes the file system, communication past record and register setting contents.

Purpose
To initialize the FAX control PWB.

Method
1. Press the start key.
2. Select [Execute]. The screen for entering the destination code and OEM code is displayed.
3. Select [Country Code] and enter a destination code using the numeric keys (refer to the destination code list on following for the destination code).
4. Press the start key.
   There is no operation necessary on this screen.
   The destination code and the OEM code are displayed with the values currently set.
5. Press the start key. Data initialization starts. To cancel data initialization, press the stop key.
6. After data initialization, the entered destination, OEM codes and ROM version are displayed.
   A ROM version displays three kinds, application, boot, and IPL.

Destination code list

Code	Destination	Code	Destination
000	Japan	253	CTR21 (European nations)
009	Australia		Italy
038	China		Germany
080	Hong Kong		Spain
084	Indonesia		U.K.
088	Israel		Netherlands
097	Korea		Sweden
108	Malaysia		France
126	New Zealand		Austria
136	Peru		Switzerland
137	Philippines		Belgium
152	Middle East		Denmark
156	Singapore		Finland
159	South Africa		Portugal
169	Thailand		Ireland
181	U.S.A.		Norway
242	South America	254	Taiwan
243	Saudi Arabia		

Item No.	Description
U601	**Initializing permanent data** **Description** Initializes software switches on the FAX control PWB according to the destination and OEM. **Purpose** To initialize the FAX control PWB without changing user registration data. **Method** 1. Press the start key. 2. Select [Execute]. The screen for entering the destination code and OEM code is displayed. 3. Select [Country Code] and enter a destination code using the numeric keys (refer to the destination code list on page 1-3-22 for the destination code). 4. Press the start key. There is no operation necessary on this screen. The destination code and the OEM code are displayed with the values currently set. 5. Press the start key. Data initialization starts. To cancel data initialization, press the back key. 6. After data initialization, the entered destination, OEM codes and ROM version are displayed. A ROM version displays three kinds, application, boot, and IPL.
U603	**Setting user data 1** **Description** Makes user settings to enable the use of the machine as a fax. **Purpose** To be run after installation of the facsimile kit if necessary. **Method** 1. Press the start key. 2. Select [LINE TYPE] and press the start key. 3. Select the setting using the cursor up/down keys. **Display** / **Description** DTMF / DTMF 10PPS / 10 PPS 20PPS / 20 PPS * : Initial setting: DTMF 4. Press the start key. The setting is set. **Completion** Press the stop key. The screen for selecting a maintenance item No. is displayed.

<table>
<tr><th>Item No.</th><th>Description</th></tr>
<tr><td>U604</td><td>

Setting user data 2

Description
Makes user settings to enable the use of the machine as a fax.
Purpose
Use this if the user wishes to adjust the number of rings that occur before the unit switches into fax receiving mode when fax/telephone auto-select is enabled.

Method
1. Press the start key.
2. Select [RINGS(F/P)#].
3. Change the setting using the cursor left/right keys or numeric keys.

Description	Setting range	Initial setting
Number of fax/telephone rings	0 to 15	2 (120 V)/1 (220-240 V)

* : If you set this to 0, the unit will start fax reception without any ringing.

4. Press the start key. The value is set.

Completion
Press the stop key. The screen for selecting a maintenance item No. is displayed.

</td></tr>
<tr><td>U605</td><td>

Clearing data

Description
Initializes data related to the fax transmission such as transmission history.
Purpose
To clear the transmission history.

Method
1. Press the start key.
2. Select [CLEAR COM.REC.].
3. Press the start key. Initialization processing starts. When processing is finished, [Completed] is displayed.

Completion
Press the stop key. The screen for selecting a maintenance item No. is displayed.

</td></tr>
</table>

Item No.	Description
U610	**Setting system 1**

Description
Makes settings for fax reception regarding the sizes of the fax paper and received images and automatic printing of the protocol list.

Method
1. Press the start key.
2. Select the item to be set using the cursor up/down keys.

Display	Description
CUT LINE:100%	Sets the number of lines to be ignored when receiving a fax at 100% magnification.
CUT LINE:AUTO	Sets the number of lines to be ignored when receiving a fax in the auto reduction mode.
CUT LINE:A4	Sets the number of lines to be ignored when receiving a fax (A4R/LetterR) in the auto reduction mode.

Setting the number of lines to be ignored when receiving a fax at 100% magnification
Sets the maximum number of lines to be ignored if the received data volume exceeds the recording capacity when recording the data at 100% magnification. If the number of excess lines is below the setting, those lines are ignored. If over the setting, they are recorded on the next page.
1. Change the setting using the cursor left/right keys or numeric keys.

Description	Setting range	Initial setting	Change in value per step
Number of lines to be ignored when receiving at 100%	0 to 22	3	16 lines

* : Increase the setting if a blank second page is output, and decrease it if the received image does not include the entire transmitted data.
2. Press the start key. The value is set.

Setting the number of lines to be ignored when receiving a fax in the auto reduction mode
Sets the maximum number of lines to be ignored if the received data volume exceeds the recording capacity when the data is recorded in the auto reduction mode. If the number of excess lines is below the setting, those lines are ignored. If over the setting, the entire data on a page is further reduced so that it can be recorded on the same page.
1. Change the setting using the cursor left/right keys or numeric keys.

Description	Setting range	Initial setting	Change in value per step
Number of lines to be ignored when receiving in the auto reduction mode	0 to 22	0	16 lines

* : Increase the setting if a page received in the reduction mode is over-reduced and too much trailing edge margin is left. Decrease it if the received image does not include all transmitted data.
2. Press the start key. The value is set.

Item No.	Description
U610	**Setting the number of lines to be ignored when receiving a fax (A4R/LetterR) in the auto reduction mode** Sets the maximum number of lines to be ignored if the received data volume exceeds the recording capacity when the data is recorded in the auto reduction mode onto A4R or LetterR paper under the conditions below. If the number of excess lines is below the setting, those lines are ignored. If over the setting, the entire data on a page is further reduced so that it can be recorded on the same page. 1. Change the setting using the cursor left/right keys or numeric keys. **Description** / **Setting range** / **Initial setting** / **Change in value per step** Number of lines to be ignored when receiving a fax (A4R, letter) in the auto reduction mode / 0 to 22 / 0 / 16 lines * : Increase the setting if a page received in the reduction mode is over-reduced and too much trailing edge margin is left. Decrease it if the received image does not include all transmitted data. 2. Press the start key. The value is set. **Completion** Press the stop key. The screen for selecting a maintenance item No. is displayed.

Item No.	Description
U611	**Setting system 2** **Description** Sets the number of adjustment lines for automatic reduction. **Method** 1. Press the start key. 2. Select the item to be set using the cursor up/down keys.

Display	Description
ADJ LINES	Sets the number of adjustment lines for automatic reduction.
ADJ LINES(A4)	Sets the number of adjustment lines for automatic reduction when A4 paper is set.
ADJ LINES(LT)	Sets the number of adjustment lines for automatic reduction when letter size paper is set.

Setting the number of adjustment lines for automatic reduction

Sets the number of adjustment lines for automatic reduction.

1. Change the setting using the cursor left/right keys or numeric keys.

Description	Setting range	Initial setting
Number of adjustment lines for automatic reduction	0 to 22	7

2. Press the start key. The value is set.

Setting the number of adjustment lines for automatic reduction when A4 paper is set

Sets the number of adjustment lines for automatic reduction when A4 paper is set.

1. Change the setting using the cursor left/right keys or numeric keys.

Description	Setting range	Initial setting
Number of adjustment lines for automatic reduction when A4 paper is set	0 to 22	22

2. Press the start key. The value is set.

Setting the number of adjustment lines for automatic reduction when letter size paper is set

Sets the number of adjustment lines for automatic reduction when letter size paper is set.

1. Change the setting using the cursor left/right keys or numeric keys.

Description	Setting range	Initial setting
Number of adjustment lines for automatic reduction when letter size paper is set	0 to 26	26

2. Press the start key. The value is set.

Completion

Press the stop key. The screen for selecting a maintenance item No. is displayed.

Item No.	Description
U612	**Setting system 3** **Description** Makes settings for fax transmission regarding operation and automatic printing of the protocol list. **Method** 1. Press the start key. 2. Select the item to be set using the cursor up/down keys. **Selecting if auto reduction in the auxiliary direction is to be performed** Sets whether to receive a long document by automatically reducing it in the auxiliary direction or at 100% magnification. 1. Select the setting using the cursor left/right keys. * : Initial setting: ON 2. Press the start key. The setting is set. **Setting the automatic printing of the protocol list** Sets if the protocol list is automatically printed out. 1. Select the setting using the cursor left/right keys. * : Initial setting: OFF 2. Press the start key. The setting is set.

Display	Description
AUTO REDUCTION	Selects if auto reduction in the auxiliary direction is to be performed.
PROTOCOL LIST	Sets the automatic printing of the protocol list.
DETECT TRAIL	Sets the detection of trailing edge margin.

Display	Description
ON	Auto reduction is performed if the received document is longer than the fax paper.
OFF	Auto reduction is not performed.

Display	Description
ON	The protocol list is automatically printed out after communication.
OFF	The protocol list is not printed out automatically.
ERR	The protocol list is automatically printed out after communication only if a communication error occurs.

<table>
<tr><th>Item No.</th><th>Description</th></tr>
<tr><td>U612</td><td>

Selecting if detection of trail edge margin is to be performed

This determines whether trailing edge margin is detected (to prevent image from being mutilated) while printing a received Fax.

1. Select the setting using the cursor left/right keys.

Display	Description
ON	The trail edge margin is detected.
OFF	The trail edge margin is not detected.

* : Initial setting: ON

2. Press the start key. The setting is set.

Completion

Press the stop key. The screen for selecting a maintenance item No. is displayed.

</td></tr>
<tr><td>U620</td><td>

Setting the remote switching mode

Description

Sets the signal detection method for remote switching. Be sure to change the setting according to the type of telephone connected to the machine.

Setting

1. Press the start key.
2. Select [REMORT MODE] and press the start key.
3. Select the mode using the cursor up/down keys.

Display	Description
ONE	One-shot detection
CONT	Continuous detection

* : Initial setting: ONE

4. Press the start key. The setting is set.

Completion

Press the stop key. The screen for selecting a maintenance item No. is displayed.

</td></tr>
</table>

Item No.	Description
U625	**Setting the transmission system 1** **Description** Makes settings for the auto redialing interval and the number of times of auto redialing. **Purpose** Change the setting to prevent the following problems: fax transmission is not possible due to too short redial interval, or fax transmission takes too much time to complete due to too long redial interval. **Method** 1. Press the start key. 2. Select the item to be set using the cursor up/down keys. **Display** / **Description** INTERVAL — Setting the auto redialing interval TIMES — Setting the number of times of auto redialing **Setting the auto redialing interval** 1. Change the setting using the cursor left/right keys. **Description** / **Setting range** / **Initial setting** Redialing interval / 1 to 9 (min.) / 3 (120 V)/2 (220-240 V) 2. Press the start key. The value is set.
U625	**Setting the number of times of auto redialing** 1. Change the setting using the cursor left/right keys or numeric keys. **Description** / **Setting range** / **Initial setting** Number of redialing / 0 to 15 / 2 (120 V)/3 (220-240 V) 2. Press the start key. The value is set. **Completion** Press the stop key. The screen for selecting a maintenance item No. is displayed.

Item No.	Description
U630	**Setting communication control 1** **Description** Makes settings for fax transmission regarding the communication. **Method** 1. Press the start key. 2. Select the item to be set using the cursor up/down keys. **Display** / **Description** TX SPEED — Sets the communication starting speed. RX SPEED — Sets the reception speed. TX ECHO — Sets the waiting period to prevent echo problems at the sender. RX ECHO — Sets the waiting period to prevent echo problems at the receiver. **Setting the communication starting speed** Sets the initial communication speed when starting transmission. When the destination unit has V.34 capability, V.34 is selected for transmission, regardless of this setting. 1. Select the setting using the cursor up/down keys. **Display** / **Description** 14400bps/V17 — V.17, 14400 bps 9600bps/V29 — V.17, 9600 bps 4800bps/V27ter — V.27ter, 4800 bps 2400bps/V27ter — V.27ter, 2400 bps * : Initial setting: 14400bps/V17 2. Press the start key. The setting is set.

Item No.	Description
U630 (cont.)	

Setting the reception speed

Sets the reception speed that the sender is informed of using the DIS or NSF signal. When the destination unit has V.34 capability, V.34 is selected, regardless of the setting.

1. Select the setting using the cursor up/down keys.

Display	Description
14400bps	V.17, V.33, V.29, V.27ter
9600bps	V.29, V.27ter
4800bps	V.27ter
2400bps	V.27ter (fallback only)

* : Initial setting: 14400bps

2. Press the start key. The setting is set.

Setting the waiting period to prevent echo problems at the sender

Sets the period before a DCS signal is sent after a DIS signal is received. Used when problems occur due to echoes at the sender.

1. Select the setting using the cursor up/down keys.

Display	Description
500	Sends a DCS 500 ms after receiving a DIS.
300	Sends a DCS 300 ms after receiving a DIS.

* : Initial setting: 300

2. Press the start key. The setting is set.

Setting the waiting period to prevent echo problems at the receiver

Sets the period before an NSF, CSI or DIS signal is sent after a CED signal is received. Used when problems occur due to echoes at the receiver.

1. Select the setting using the cursor up/down keys.

Display	Description
500	Sends an NSF, CSI or DIS 500 ms after receiving a CED.
75	Sends an NSF, CSI or DIS 75 ms after receiving a CED.

* : Initial setting: 75

2. Press the start key. The setting is set.

Completion

Press the stop key. The screen for selecting a maintenance item No. is displayed.

Item No.	Description
U631	**Setting communication control 2** **Description** Makes settings regarding fax transmission. **Method** 1. Press the start key. 2. Select the item to be set using the cursor up/down keys. **Display** / **Description** ECM TX — Sets ECM transmission. ECM RX — Sets ECM reception. CED FREQ. — Sets the frequency of the CED signal. **Setting ECM transmission** To be set to OFF when reduction of transmission costs is of higher priority than image quality. This should not be set to OFF when connecting to the IP (Internet Protocol) telephone line. 1. Select the setting using the cursor up/down keys. **Display** / **Description** ON — ECM transmission is enabled. OFF — ECM transmission is disabled. * : Initial setting: ON 2. Press the start key. The setting is set. **Setting ECM reception** To be set to OFF when reduction of transmission costs is of higher priority than image quality. This should not be set to OFF when connecting to the IP (Internet Protocol) telephone line. 1. Select the setting using the cursor up/down keys. **Display** / **Description** ON — ECM reception is enabled. OFF — ECM reception is disabled. * : Initial setting: ON 2. Press the start key. The setting is set. **Setting the frequency of the CED signal** Sets the frequency of the CED signal. Used as one of the measures to improve transmission performance for international communications. 1. Select the setting using the cursor up/down keys. **Display** / **Description** 2100 — 2100 Hz 1100 — 1100 Hz * : Initial setting: 2100 2. Press the start key. The setting is set. **Completion** Press the stop key. The screen for selecting a maintenance item No. is displayed.

Item No.	Description
U632	**Setting communication control 3** **Description** Makes settings for fax transmission regarding the communication. **Method** 1. Press the start key. 2. Select the item to be set using the cursor up/down keys. **Display** / **Description** DIS 4BYTE — Sets the DIS signal to 4 bytes. SHORT PRTCL TX — Sets the short protocol transmission. SHORT PRTCL RX — Sets the reception of short protocol transmission. NUM OF CNG(F/T) — Sets the CNG detection times in the fax/telephone auto select mode. **Setting the DIS signal to 4 bytes** Sets if bit 33 and later bits of the DIS/DTC signal are sent. 1. Select the setting using the cursor up/down keys. **Display** / **Description** ON — Bit 33 and later bits of the DIS/DTC signal are not sent. OFF — Bit 33 and later bits of the DIS/DTC signal are sent. * : Initial setting: OFF 2. Press the start key. The setting is set. **Setting the short protocol transmission** Sets if short protocol transmission is performed. 1. Select the setting using the cursor up/down keys. **Display** / **Description** ON — Short protocol transmission is performed. OFF — Short protocol transmission is not performed. * : Initial setting: ON 2. Press the start key. The setting is set. **Setting the reception of a short protocol transmission** Selects whether to receive or ignore transmission using short protocol. If a short protocol transmission is received when an auto switching device is attached to the machine, communication problems, including auto switching inability, sometimes occur. Change the setting to ignore short protocol transmission to prevent such problems. 1. Select the setting using the cursor up/down keys. **Display** / **Description** ON — Receives short protocol transmission. OFF — Ignores short protocol transmission. * : Initial setting: ON 2. Press the start key. The setting is set.

<table>
<tr><th>Item No.</th><th>Description</th></tr>
<tr><td>U632</td><td>

Setting the CNG detection times in the fax/telephone auto select mode

Sets the CNG detection times in the fax/telephone auto select mode.

1. Select the setting using the cursor up/down keys.

Display	Description
1TIME	Detects CNG once.
2TIMES	Detects CNG twice.

* : Initial setting: 2TIMES

2. Press the start key. The setting is set.

Completion

Press the stop key. The screen for selecting a maintenance item No. is displayed.

</td></tr>
<tr><td>U633</td><td>

Setting communication control 4

Description

Makes settings for fax transmission regarding the communication.

Purpose

To reduce transmission errors when a low quality line is used.

Method

1. Press the start key.
2. Select the item to be set using the cursor up/down keys.

Display	Description
V.34	Enables or disables V.34 communication.
V.34-3429Hz	Sets the V.34 symbol speed (3429 Hz).
DIS 2RES	Sets the number of times of DIS signal reception.
RTN CHECK	Sets the reference for RTN signal output.

Enabling/disabling V.34 communication

Sets whether V.34 communication is enabled/disabled for transmission and reception.

1. Select the setting using the cursor up/down keys.

Display	Description
ON	V.34 communication is enabled for both transmission and reception.
TX	V.34 communication is enabled for transmission only.
RX	V.34 communication is enabled for reception only.
OFF	V.34 communication is disabled for both transmission and reception.

* : Initial setting: ON

2. Press the start key. The setting is set.

</td></tr>
</table>

Item No.	Description
U633	**Setting the V.34 symbol speed (3429 Hz)** Sets if the V.34 symbol speed 3429 Hz is used. 1. Select the setting using the cursor up/down keys. **Display** / **Description** ON / V.34 symbol speed 3429 Hz is used. OFF / V.34 symbol speed 3429 Hz is not used. * : Initial setting: ON 2. Press the start key. The setting is set. **Setting the number of times of DIS signal reception** Sets the number of times to receive the DIS signal to once or twice. Used as one of the correction measures for transmission errors and other problems. 1. Select the setting using the cursor up/down keys. **Display** / **Description** ONCE / Responds to the first signal. TWICE / Responds to the second signal. * : Initial setting: ONCE 2. Press the start key. The setting is set. **Setting the reference for RTN signal output** Sets the error line rate as the reference for RTN signal output. If transmission errors occur frequently due to the quality of the line, they can be reduced by lowering this setting. 1. Select the setting using the cursor up/down keys. **Display** / **Description** 5% / Error line rate of 5% 10% / Error line rate of 10% 15% / Error line rate of 15% 20% / Error line rate of 20% * : Initial setting: 15% 2. Press the start key. The setting is set. **Completion** Press the stop key. The screen for selecting a maintenance item No. is displayed.

<table>
<tr><th>Item No.</th><th>Description</th></tr>
<tr><td>U634</td><td>

Setting communication control 5

Description
Sets the maximum number of error bytes judged acceptable when receiving a TCF signal. Used as a measure to ease transmission conditions if transmission errors occur.

Setting
1. Press the start key.
2. Change the setting using the cursor left/right keys or numeric keys.

Description	Setting range	Initial setting
Number of allowed error bytes when detecting TCF	0 to 255	0

3. Press the start key. The value is set.

Completion
Press the stop key. The screen for selecting a maintenance item No. is displayed.

</td></tr>
<tr><td>U640</td><td>

Setting communication time 1

Description
Sets the detection time when one-shot detection is selected for remote switching. (This setting item will be displayed, but the setting made is ineffective.)
Sets the detection time when continuous detection is selected for remote switching. (This setting item will be displayed, but the setting made is ineffective.)

Method
1. Press the start key.
2. Select the item to be set using the cursor up/down keys.

Display	Description
TIME (ONE)	Sets the one-shot detection time for remote switching.
TIME (CONT)	Sets the continuous detection time for remote switching.

Setting the one-shot detection time for remote switching
1. Change the setting using the cursor left/right keys.

Description	Setting range	Initial setting
One-shot detection time for remote switching	0 to 255	7

2. Press the start key. The value is set.

Setting the continuous detection time for remote switching
1. Change the setting using the cursor left/right keys.

Description	Setting range	Initial setting
Continuous detection time for remote switching	0 to 255	80

2. Press the start key. The value is set.

Completion
Press the stop key. The screen for selecting a maintenance item No. is displayed.

</td></tr>
</table>

Item No.	Description
U641	**Setting communication time 2** **Description** Sets the time-out time for fax transmission. **Purpose** To improve transmission performance for international communications mainly. **Method** 1. Press the start key. 2. Select the item to be set using the cursor up/down keys.

Display	Description
T0 TIME OUT	Sets the T0 time-out time.
T1 TIME OUT	Sets the T1 time-out time.
T2 TIME OUT	Sets the T2 time-out time.
Ta TIME OUT	Sets the Ta time-out time.
Tb1 TIME OUT	Sets the Tb1 time-out time.
Tb2 TIME OUT	Sets the Tb2 time-out time.
Tc TIME OUT	Sets the Tc time-out time.
Td TIME OUT	Sets the Td time-out time.

Setting the T0 time-out time

Sets the time before detecting a CED or DIS signal after a dialing signal is sent.
Depending on the quality of the exchange, or when the auto select function is selected at the destination unit, a line can be disconnected. Change the setting to prevent this problem.

1. Change the setting using the cursor left/right keys.

Description	Setting range	Initial setting
T0 time-out time	30 to 90 s	56

2. Press the start key. The value is set.

Setting the T1 time-out time

Sets the time before receiving the correct signal after call reception. No change is necessary for this maintenance item.

1. Change the setting using the cursor left/right keys.

Description	Setting range	Initial setting
T1 time-out time	30 to 90 s	36

2. Press the start key. The value is set.

Item No.	Description
U641	

Setting the T2 time-out time

The T2 time-out time decides the following.
From CFR signal output to image data reception
From image data reception to the next signal reception
In ECM, from RNR signal detection to the next signal reception

1. Change the setting using the cursor left/right keys.

Description	Setting range	Initial setting	Change in value per step
T2 time-out time	1 to 255	69	100 ms

2. Press the start key. The value is set.

Setting the Ta time-out time

In the fax/telephone auto select mode, sets the time to continue ringing an operator through the connected telephone after receiving a call as a fax machine (see figure 1-3-3). A fax signal is received within the Ta set time, or the fax mode is selected automatically when the time elapses. In fax/telephone auto select mode, change the setting when fax reception is unsuccessful or a telephone fails to receive a call.

1. Change the setting using the cursor left/right keys.

Description	Setting range	Initial setting
Ta time-out time	1 to 255	30

2. Press the start key. The value is set.

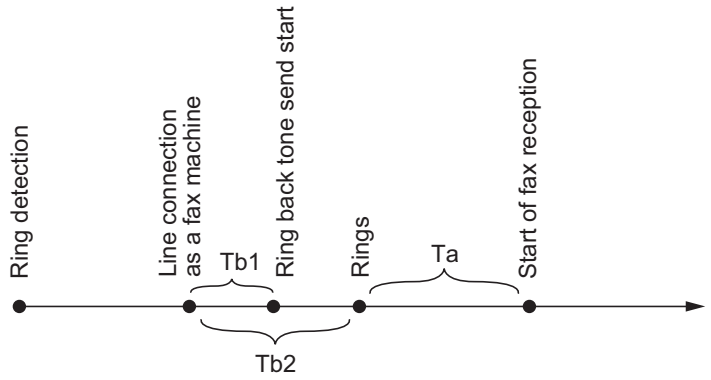

Figure 1-3-3 Ta/Tb1/Tb2 time-out time

Setting the Tb1 time-out time

In the fax/telephone auto select mode, sets the time to start sending the ring back tone after receiving a call as a fax machine (see figure 1-3-3). In fax/telephone auto select mode, change the setting when fax reception is unsuccessful or a telephone fails to receive a call.

1. Change the setting using the cursor left/right keys.

Description	Setting range	Initial setting	Change in value per step
Tb1 time-out time	1 to 255	20	100 ms

2. Press the start key. The value is set.

Item No.	Description
U641	

Setting the Tb2 time-out time

In the fax/telephone auto select mode, sets the time to start ringing an operator through the connected telephone after receiving a call as a fax machine (see figure 1-3-3). In the fax/telephone auto select mode, change the setting when fax reception is unsuccessful or a telephone fails to receive a call.

1. Change the setting using the cursor left/right keys.

Description	Setting range	Initial setting	Change in value per step
Tb2 time-out time	1 to 255	80	100 ms

2. Press the start key. The value is set.

Setting the Tc time-out time

In the TAD mode, set the time to check if there are any triggers for shifting to fax reception after a connected telephone receives a call. Only the telephone function is available if shifting is not made within the set Tc time.

In the TAD mode, change the setting when fax reception is unsuccessful or a telephone fails to receive a call.

1. Change the setting using the cursor left/right keys.

Description	Setting range	Initial setting
Tc time-out time	1 to 255	60

2. Press the start key. The value is set.

Setting the Td time-out time

Sets the length of the time required to determine silent status (fax), one of the triggers for Tc time check. In the TAD mode, change the setting when fax reception is unsuccessful or a telephone fails to receive a call. Be sure not to set it too short; otherwise, the mode may be shifted to fax while the unit is being used as a telephone.

1. Change the setting using the cursor left/right keys.

Description	Setting range	Initial setting
Td time-out time	1 to 255	9 (120 V)/6 (220-240 V)

2. Press the start key. The value is set.

Completion

Press the stop key. The screen for selecting a maintenance item No. is displayed.

Item No.	Description
U650	**Setting modem 1** **Description** Sets the G3 cable equalizer. Sets the modem detection level. **Purpose** Perform the following adjustment to make the equalizer compatible with the line characteristics. To improve the transmission performance when a low quality line is used. **Method** 1. Press the start key. 2. Select the item to be set using the cursor up/down keys. **Setting the G3 transmission cable equalizer** 1. Select [0dB], [4dB], [8dB] or [12dB] using the cursor up/down keys. * : Initial setting: 0dB 2. Press the start key. The setting is set. **Setting the G3 reception cable equalizer** 1. Select [0dB], [4dB], [8dB] or [12dB] using the cursor up/down keys. * : Initial setting: 0dB 2. Press the start key. The setting is set. **Setting the modem detection level** 1. Select [33dBm], [38dBm], [43dBm] or [48dBm] using the cursor up/down keys. * : Initial setting: 43dBm 2. Press the start key. The setting is set. **Completion** Press the stop key. The screen for selecting a maintenance item No. is displayed.

Display	Description
REG. G3 TX EQR	Sets the G3 transmission cable equalizer.
REG. G3 RX EQR	Sets the G3 reception cable equalizer.
RX MODEM LEVEL	Sets the modem detection level.

Item No.	Description
U651	**Setting modem 2** **Description** Sets the modem output level. Sets the DTMF output level of a push-button dial telephone. **Purpose** Used if problems occur when sending a signal with a push-button dial telephone. **Setting** 1. Press the start key. 2. Select the item to be set using the cursor up/down keys. 3. Change the setting using the cursor left/right keys or numeric keys. **Display** / **Description** / **Setting range** / **Initial setting** SGL LV MDM / Modem output level / 1 to 15 / 9 (120 V) 10 (220-240 V) DTMF LV(C) / DTMF output level (main value) / 0 to 15.0 / 5 (120 V) 10.5 (220-240 V) DTMF LV(D) / DTMF output level (level difference) / 0 to 5.5 / 2 (120 V) 2.5 (220-240 V) 4. Press the start key. The setting is set. **Completion** Press the stop key. The screen for selecting a maintenance item No. is displayed.

Item No.	Description
U660	**Setting the NCU** **Description** Makes setting regarding the network control unit (NCU). **Purpose** To be set when installing the facsimile kit. **Method** 1. Press the start key. 2. Select the item to be set using the cursor up/down keys. **Display** / **Description** EXCHANGE — Sets the connection to PBX/PSTN. DIAL TONE — Sets PSTN dial tone detection. BUSY TONE — Sets busy tone detection. PBX SETTING — Setting for a PBX. DC LOOP — Sets the loop current detection before dialing. **Setting the connection to PBX/PSTN** Selects if a fax is to be connected to either a PBX or public switched telephone network. 1. Select the setting using the cursor up/down keys. **Display** / **Description** PSTN — Connected to the public switched telephone network. PBX — Connected to a PBX. * : Initial setting: PSTN 2. Press the start key. The setting is set. **Setting PSTN dial tone detection** Selects if the dial tone is detected to check the telephone is off the hook when a fax is connected to a public switched telephone network. 1. Select the setting using the cursor up/down keys. **Display** / **Description** ON — Detects the dial tone. OFF — Does not detect the dial tone. * : Initial setting: ON 2. Press the start key. The setting is set.

Item No.	Description
U660	**Setting busy tone detection** When a fax signal is sent, sets whether the line is disconnected immediately after a busy tone is detected, or the busy tone is not detected and the line remains connected until T0 time-out time. Fax transmission may fail due to incorrect busy tone detection. When set to 2, this problem may be prevented. However, the line is not disconnected within the T0 time-out time even if the destination line is busy. 1. Select the setting using the cursor up/down keys. **Display** / **Description** ON / Detects busy tone. OFF / Does not detect busy tone. * : Initial setting: ON 2. Press the start key. The setting is set. **Setting for a PBX** Selects the mode to connect an outside call when connected to a PBX. According to the type of the PBX connected, select the mode to connect an outside call. 1. Select the setting using the cursor up/down keys. **Display** / **Description** EARTH / Earth mode FLASH / Flashing mode LOOP / Code number mode * : Initial setting: LOOP 2. Press the start key. The setting is set. **Setting the loop current detection before dialing** Sets if the loop current detection is performed before dialing. 1. Select the setting using the cursor up/down keys. **Display** / **Description** ON / Performs loop current detection before dialing. OFF / Does not perform loop current detection before dialing. * : Initial setting: ON 2. Press the start key. The setting is set. **Completion** Press the stop key. The screen for selecting a maintenance item No. is displayed.

Item No.	Description
U670	**Outputting lists** **Description** Outputs a list of data regarding fax transmissions. Printing a list is disabled either when a job is remaining in the buffer or when [Pause All Print Jobs] is pressed to halt printing. **Purpose** To check conditions of use, settings and transmission procedures of the fax. **Method** 1. Press the start key. 2. Select the item to be output using the cursor up/down keys. 3. Press the start key. The selected list is output. **Completion** Press the stop key. The screen for selecting a maintenance item No. is displayed.

Display	Description
SETTING LIST	Outputs a list of software switches, self telephone number, confidential boxes, ROM versions and other information.
ACTION LIST	Outputs a list of error history, transmission line details and other information.
SELF ST REPORT	Outputs a list of settings in maintenance mode (own-status report) regarding fax transmission only.
PROTOCOL LIST	Outputs a list of transmission procedures.
ERROR LIST	Outputs a list of error.
ADDR BOOK (No.)	Outputs address book in order IDs were added
ADDR BOOK (Name)	Outputs address book in order of names
ONE-TOUCH LIST	Outputs a list of one-touch.
GROUP LIST	Outputs a list of group.

Item No.	Description
U695	**FAX function customize** **Description** Sets fax batch transmission ON/OFF. Also changes the print size priority at the time of small size reception. **Purpose** To be executed as required. **Setting** 1. Select the setting using the cursor up/down keys. **Setting: [FAX BULK TX]** 1. Select ON or OFF using the cursor left/right keys. * : Initial setting: ON 2. Press the start key. The setting is set. **Setting: [A5 PT PRI CHG]** 1. Select ON or OFF using the cursor left/right keys. * : Initial setting: OFF 2. Press the start key. The setting is set. **Completion** Press the stop key. The screen for selecting a maintenance item No. is displayed.

Display	Description
FAX BULK TX	fax batch transmission ON/OFF
A5 PT PRI CHG	Change of print size priority at the time of small size reception

Display	Description
ON	Fax batch transmission is enabled.
OFF	Fax batch transmission is disabled.

Display	Description
ON	At the time of A5 size reception: A5→B5→A4
OFF	At the time of A5 size reception: A5→A4→B5

Item No.	Description
U699	**Setting the software switches** **Description** Sets the software switches on the FAX control PWB individually. **Purpose** To change the setting when a problem such as split output of received originals occurs. Since the communication performance is largely affected, normally this setting need not be changed. **Method** 1. Press the start key. 2. Press [SW No.]. 3. Enter the desired software switch number (3 digits) using the numeric keys and press the enter key. 4. Use numeric keys 7 to 0 to switch each bit between 0 and 1. 5. Press the start key to set the value. **Completion** Press the stop key. The screen for selecting a maintenance item No. is displayed. **List of Software Switches of Which the Setting Can Be Changed** **<Communication control procedure>**

No.	Bit	Item
36	7654	Coding format in transmission
	3210	Coding format in reception
37	5	33600 bps/V34
	4	31200 bps/V34
	3	28800 bps/V34
	2	26400 bps/V34
	1	24000 bps/V34
	0	21600 bps/V34
38	7	19200 bps/V34
	6	16800 bps/V34
	5	14400 bps/V34
	4	12000 bps/V34
	3	9600 bps/V34
	2	7200 bps/V34
	1	4800 bps/V34
	0	2400 bps/V34
41	3	FSK detection in V.8
42	4	4800 bps when low-speed setting is active
	2	FIF length in transmission of more than 4 times of DIS/DTC signal

Item No.	Description
U699	

<Communication time setting>

No.	Bit	Item
53	76543210	T3 timeout setting
54	76543210	T4 timeout setting (automatic equipment)
55	76543210	T5 timeout setting
60	76543210	Time before transmission of CNG (1100 Hz) signal
63	76543210	T0 timeout setting (manual equipment)
64	7	Phase C timeout in ECM reception
66	76543210	Timeout 1 in countermeasures against echo
68	76543210	Timeout for FSK detection start in V.8

<Modem setting>

No.	Bit	Item
89	76543	RX gain adjust

<NCU setting>

No.	Bit	Item
121	7654	Dial tone/busy tone detection pattern
122	7654	Busy tone detection pattern
	1	Busy tone detection in automatic FAX/TEL switching
125	76543210	Access code registration for connection to PSTN
126	7654	FAX/TEL automatic switching ringback tone ON/OFF cycle

<Calling time setting>

No.	Bit	Item
133	76543210	DTMF signal transmission time
134	76543210	DTMF signal pause time
141	76543210	Ringer detection cycle (minimum)
142	76543210	Ringer detection cycle (maximum)
143	76543210	Ringer ON time detection
144	76543210	Ringer OFF time detection
145	76543210	Ringer OFF non-detection time
147	76543210	Dial tone detection time (continuous tone)
148	76543210	Allowable dial tone interruption time
149	76543210	Time for transmitting selection signal after closing the DC circuit
151	76543210	Ringer frequency detection invalid time

Item No.	Description
U910	**Clearing the black ratio data** **Description** Clears the accumulated black ratio data for A4 sheet. **Purpose** To clear data as required at times such as during maintenance service. **Method** 1. Press the start key. 2. Select [ALL CLEAR] using the cursor up/down keys. 3. Press the start key. The accumulated black ratio data is cleared. **Completion** Press the stop key. The screen for selecting a maintenance item No. is displayed.

Item No.	Description
U917	**Setting backup data reading/writing**

Description
Retrieves the backup data to a USB memory from the machine; or writes the data from the USB memory to the machine.
Purpose
To store and write data when replacing the control PWB.

Method
1. Press the power key on the operation panel, and after verifying the power indicator has gone off, switch off the power switch.
2. Insert USB memory in USB memory slot.
3. Turn the power switch on.
   Wait for 10 seconds to allow the machine to recognize the USB memory.
4. Enter the maintenance item.
5. Press the start key.
6. Select [Export] or [Import] using the cursor up/down keys and press the start key.

Display	Description
IMPORT	Writing data from the USB memory to the machine
EXPORT	Retrieving from the machine to a USB memory

7. Select the item using the cursor up/down keys.

Display	Description	Depending data
ADDRESS BOOK	Address book	-
JOB ACCNT.	Job accounting	-
ONE TOUCH	Information on one-touch key	Address book
USER	User managements	Job accounting
PROGRAM	Program information	Job accountings and user manage-ments
DOCUMENT BOX	Document box information	Job accountings and user manage-ments
FAX FORWARD	FAX transfer information	Job accountings, user managements and document box information

* : Since data are dependent with each other, data other than those assigned are also retrieved or written in.

8. Select [ON] using the cursor left/right keys.
9. Press the start key. Starts reading or writing.
   The progress of selected item is displayed in %.
   When an error occurs, the operation is canceled and an error code is displayed.
10. When normally completed, [FIN] is displayed.
11. Turn the power switch off and on after completing writing when selecting [IMPORT].

Item No.	Description
U917	**Error Codes**

Codes	Description	Codes	Description
e002	Parameter error	e31e	User managements error
e003	File write error	e31f	User managements open error
e004	File initialization error	e320	User managements error
e005	File error	e410	Box file open error
e006	Processing error	e411	Box error in writing
e010	Address book clear error (contact)	e412	Box error in reading
e011	Address book open error (contact)	e413	Box list error
e012	Address book list error (contact)	e414	Box list error
e013	Address book list error (contact)	e415	Box error
e014	Address book clear error (group)	e416	Box error
e015	Address book open error (group)	e417	Box open error
e016	Address book list error (group)	e418	Box close error
e017	Address book list error (group)	e419	Box creation error
e110	Job accounting clear error	e41a	Box creation error
e111	Job accounting open error	e41b	Box deletion error
e112	Job accounting open error	e41c	Box movement error
e113	Job accounting error in writing	e510	Program error in writing
e114	Job accounting list error	e511	Program error in reading
e115	Job accounting list error	e710	Fax memory open error
e210	One-touch open error	e711	Fax memory initialization error
e211	One-touch list error	e712	Fax memory list error
e212	One-touch list error	e713	Fax memory error
e310	User managements backup error	e714	Fax memory error
e311	User managements clear error	e715	Fax memory mode error
e312	User managements open error	e716	Fax memory error
e313	User managements open error	e717	Fax memory error
e314	User managements open error	e718	Fax memory mode error
e315	User managements error in writing	e910	File reading error
e316	User managements list error	e911	File writing error
e317	User managements list error	e912	Data mismatch
e318	User managements list error	e913	Log file open error
e319	User managements list error	e914	Log file error in writing
e31a	User managements open error	e915	Directory open error
e31b	User managements error	e916	Directory error in reading
e31c	User managements error	e917	Synchronization error
e31d	User managements open error	e918	Synchronization error

<table>
<tr><th>Item No.</th><th>Description</th></tr>
<tr><td>U917</td><td>

Error Codes

Codes	Description	Codes	Description
d000	Unspecified error	d00b	File reading error
d001	HDD unavailable	d00c	File writing error
d002	USB memory is not inserted	d00d	File copy error
d003	File for writing is not found in the USB	d00e	File compressed error
d004	File for reading is not found in the HDD	d00f	File decompressed error
d005	USB error in writing	d010	Directory open error
d006	USB error in reading	d011	Directory creation error
d007	USB unmount error	d012	File writing error
d008	File rename error	d013	File reading error
d009	File open error	d014	File deletion error
d00a	File close error	d015	File copy error to the USB

Supplement
The following restrictions apply to the data which were imported from 4 in 1 model (with FAX) to 3 in 1 model (without FAX).
Personal address book: FAX-related data are not imported.
Group address book: Group addresses including FAX addresses are not imported.
Job accounting data: Initial values are added for FAX-related data.
One-touch data: Groups assigned with FAX addresses or those including FAX are not imported.
User management data: Initial values are added for out-going FAXes of authentication.
Program data: Not imported. (The same applies when data are imported from 3 in 1 to 4 in 1 model.)

Completion
Press the stop key. The screen for selecting a maintenance item No. is displayed.

</td></tr>
<tr><td>U927</td><td>

Clearing the all copy counts and machine life counts (one time only)
Description
Resets all of the counts back to zero.

Supplement
The total account counter and the machine life counter can be cleared only once if all count values are 1000 or less.

Method
1. Press the start key.
2. Press [EXECUTE].
3. Press the start key. All copy counts and machine life counts are cleared.
   [CAN NOT EXECUTE] is displayed if the count cannot be cleared.

Completion
Press the stop key. The screen for selecting a maintenance item No. is displayed.

</td></tr>
</table>

Item No.	Description
U977	**Data capture mode** **Description** Store the print data sent to the machine into USB memory. **Purpose** In case to occur the error at printing, check the print data sent to the machine. **Method** 1. Insert USB memory in USB memory slot. 2. Turn the power switch on. 3. Enter the maintenance item. 4. Press the start key. 5. Select [EXECUTE]. 6. Press the start key. 7. Send the print data to the machine. Once the print data is stored into USB memory, OK will be displayed. **Completion** Press the stop key. The screen for selecting a maintenance item No. is displayed.

1-3-2 Service mode

The machine is equipped with a maintenance function which can be used to maintain and service the machine.

(1) Executing a service mode

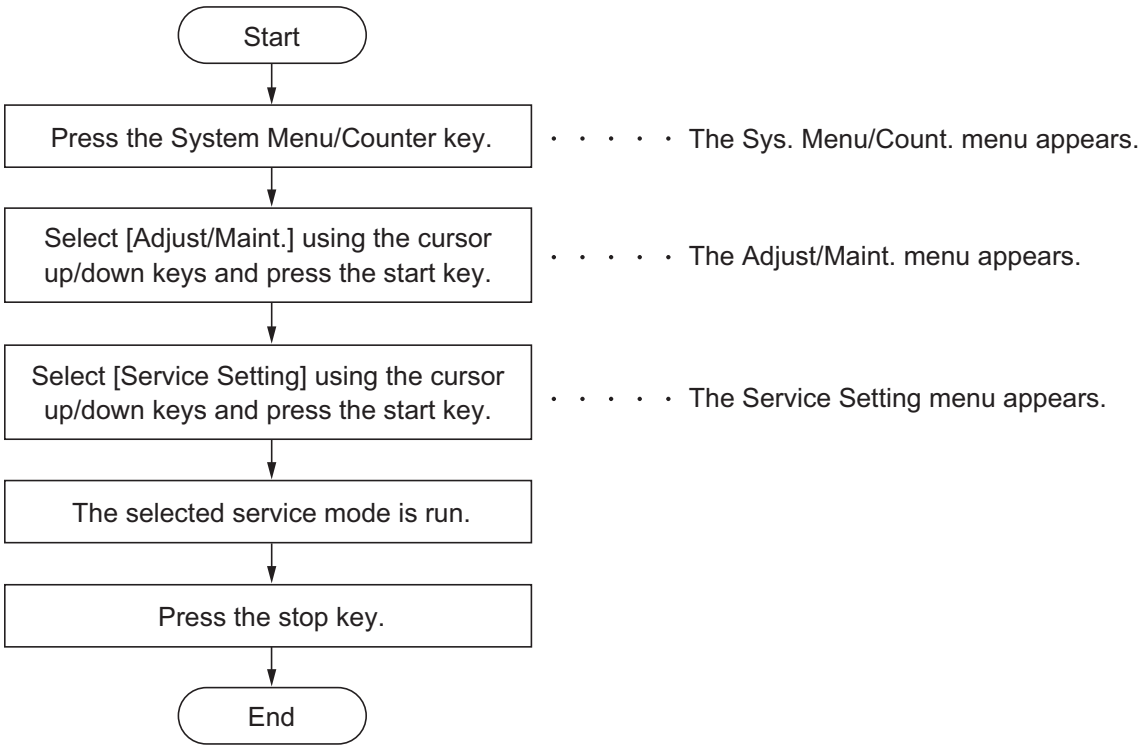

(2) Description of service mode

Service items	Description
Service Status	**Printing a status page for service purpose** **Description** Prints a status page for service purpose. The status page includes various settings and service cumulative. **Purpose** To acquire the current printing environmental parameters and cumulative information. **Method** 1. Enter the Service Setting menu. 2. Select [Service Status] using the cursor up/down keys. 3. Press the start key. 4. Press [Yes] (the Left Select key). Two pages will be printed. **Completion** Press the stop key.

Service items	Description
	Service status page (1)

Service Status Page

MFP

(2) 30/06/2010 12:00

(1) Firmware version 2MH_2000.000.000 2009.08.09 (3) [XXXXXXXX] (4) [XXXXXXXX] (5) [XXXXXXXX]

Controller Information

Memory status

(7)	Standard Size	128.0 KB
(8)	Option Slot	128.0 KB
(9)	Total Size	256.0 KB

Time

(10)	Local Time Zone	+01:00 Tokio
(11)	Date and Time	06/04/2010 12:00
(12)	Time Server	10.183.53.13

Installed Options

(13)	Document Processor	Installed
(14)	Paper Feeder	Cassette
(15)	Memory Card	Not Installed
(16)	Card Authentication Kit (B)	Installed

Print Coverage

(17) Average(%) / Usage Page(A4/Letter Conversion)

(18) Total
K: 1.10 / 1111111.11

(19) Copy
K: 1.10 / 1111111.11

(20) Printer
K: 1.10 / 1111111.11

(21) FAX
K: 1.10 / 1111111.11

(22) Period (27/10/2009 - 03/11/2009 08:40)

(23) Last Page (%) 1.00

FAX Information

(24)	Rings (Normal)	3
(25)	Rings (FAX/TEL)	3
(26)	Rings (TAD)	3

(27) FRPO Status

User Top Margin	A1+A2/100	0.00
User Left Margin	A3+A4/100	0.00
PDF mode	Y5	00

RP Code

(28) 1234 5678 9012
(29) 5678 9012 3456
(30) 9012 3456 7890
(31) 3456 7890 1234

1

(6) [XXXXXXXXXXXXXXXX]

Figure 1-3-4

Service items	Description
	Service status page (2)

Service Status Page

MFP 30/06/2010 12:00

Firmware version 2MH_2000.000.000 2009.08.09 [XXXXXXXX] [XXXXXXXX] [XXXXXXXX]

Engine Information

(32) NVRAM Version _1F31255_1F31255
(33) Scanner Version 2LX_1200.001.089
(34) FAX Slot1
FAX BOOT Version 2LX_5000.001.001
FAX APL Version 2LX_5100.001.001
FAX IPL Version 2LX_5200.001.001
(35) MAC Address 00:C0:EE:D0:01:0D
(36) DP Counters
Total 1234

Send Information

(37) Date and Time 10/06/30
(38) Address

1/2 **(39) (40)**
(41) 100/100
(42) 0/0/0/0/0/
(43) 0/0/0/0/0/
(44) 0/0/0/0/0/0/0/0/
(45) 0000000/0000000/0000000/0000000/0000000/0000000/
0000000/
F00/U00/0/0/0/30/30/70/70/00/abcde/1/0 **(46) (47) (48) (49) (50) (51) (52) (53) (54) (55) (56) (57) (58)**
(59) 0000/0000/0000/0000/0000/0000/0000/0000/0000/0000/0000/0000/0000/0000/0000/
0000/0000/0000/0000/0000/0000/0000/0000/0000/0000/
(60) 12345678/11223344/00001234abcd567800001234abcd5678/01234567890123456789012345678901/0008/00/07
2MH_D100.001.005/t/ **(61) (62)**
(63) [ABCDEFGHIJ] [ABCDEFGHIJ]
(64) [ABCDEFGHIJ]
(65) 0000000000/F80C001A37/302A183C00/000100013D/8791BEC305/0000003100/000F5D0000/01FD000000/
0000000FB7/0000000000/0000260000/0000000000/0000000000/0000008400/0000000000/011E000F51/00000073
ABCD/0000000/0000000/ABCDEFGHIJ **(66) (67) (68) (69)**

2 [XXXXXXXXXXXXXXXX]

Figure 1-3-5

Service items	Description
	Detail of service status page

No.	Description	Supplement
(1)	Firmware version	-
(2)	System date	-
(3)	Engine soft version	-
(4)	Engine boot version	-
(5)	Operation panel mask version	-
(6)	Machine serial number	-
(7)	Standard memory size	-
(8)	Optional memory size	-
(9)	Total memory size	-
(10)	Local time zone	-
(11)	Report output date	-
(12)	NTP server name	-
(13)	Presence or absence of the document processor	-
(14)	Presence or absence of the optional paper feeder	Paper feeder 2/Paper feeder 3
(15)	Presence or absence of the optional memory card	-
(16)	Presence or absence of the card authentication kit (B)	-
(17)	Page of relation to the A4/Letter	-
(18)	Average coverage for total	-
(19)	Average coverage for copy	-
(20)	Average coverage for printer	-
(21)	Average coverage for fax	-
(22)	Cleared date and output date	-
(23)	Coverage on the final output page	-
(24)	Number of rings	0 to 15
(25)	Number of rings before automatic switching	0 to 15
(26)	Number of rings before connecting to answering machine	0 to 15
(27)	FRPO setting	-

Service items	Description

No.	Description	Supplement
(28)	Engine soft version and upgrading date (The latest)	-
(29)	Main soft version and upgrading date (The latest)	-
(30)	Engine soft version and upgrading date (One ahead)	-
(31)	Main soft version and upgrading date (One ahead)	-
(32)	NV RAM version	_ 1F3 1225 _ 1F3 1225 (a) (b) (c) (d) (e) (f) (a) Consistency of the present software version and the database _ (underscore): OK * (Asterisk): NG (b) Database version (c) The oldest time stamp of database version (d) Consistency of the present software version and the ME firmware version _ (underscore): OK * (Asterisk): NG (e) ME firmware version (f) The oldest time stamp of the ME database version Normal if (a) and (d) are underscored, and (b) and (e) are identical with (c) and (f).
(33)	Scanner firmware version	-
(34)	Fax firmware version	-
(35)	Mac address	-
(36)	Number of original feed from DP	-
(37)	The last sent date and time	-
(38)	Transmission address	-
(39)	Destination information	-
(40)	Area information	-
(41)	Margin settings	Top margin/Left margin
(42)	Top offset setting	-
(43)	Left offset setting	-

Service items	Description

No.	Description	Supplement
(44)	Margin/Page length/Page width settings	Top margin integer part/Top margin decimal part/ Left margin integer part/Left margin decimal part/ Page length integer part/Page length decimal part/ Page width integer part/Page width decimal part
(45)	Life counter (The first line)	Machine life/MP tray/Cassette 1/Cassette 2/ Cassette 3/Cassette 4 /Duplex
	Life counter (The second line)	Maintenance kit
(46)	Panel lock information	0: OFF/1: Partial lock/2: Full lock
(47)	USB information	0: Not installed/1: Full speed/2: Hi speed
(48)	Paper handling information	0: Paper source unit select/1: Paper source unit
(49)	Black and white printing double count mode	0: All single counts 3: Folio, Single count, Less than 330 mm (length)
(50)	Billing counting timing	-
(51)	Temperature (machine inside)	-
(52)	Temperature (machine outside)	-
(53)	Relative temperature (machine outside)	-
(54)	Absolute temperature (machineoutside)	-
(55)	LXI calibration information	-
(56)	Fixed assets number	-
(57)	Job end judgment time-out time	-
(58)	Job end detection mode	-
(59)	Media type attributes 1 to 28 (Not used: 18, 19, 20)	Weight settings 0: Light/1: Normal 1 / 2: Normal 2 / 3: Normal 3/ 4: Heavy 1 / 5: Heavy 2 / 6: Heavy 3 / 7: Extra Heavy Fuser settings 0: High / 1: Middle / 2: Low / 3: Vellum Duplex settings 0: Disable / 1: Enable

Service items	Description

No.	Description	Supplement
(60)	RFID information	-
(61)	RFID reader/writer version information	-
(62)	Toner installation mode information	-
(63)	Soft version of the optional paper feeder	-
(64)	Version of the optional message	-
(65)	Maintenance information	-
(66)	Durm ID	-
(67)	Counter of the developer drive-time	-
(68)	Counter of the drum drive-time	-
(69)	Drum serial number	-

Code conversion

A	B	C	D	E	F	G	H	I	J
0	1	2	3	4	5	6	7	8	9

Service items	Description
Network Status	**Printing a status page for network** **Description** Prints a status page for network. **Purpose** To acquire the detailed network setting information. **Method** 1. Enter the Service Setting menu. 2. Select [Network Status] using the cursor up/down keys. 3. Press the start key. 4. Press [Yes] in the confirmation display. Network status page will be printed. **Completion** Press the stop key.
New Developer	**Perform the toner installation of the developer unit.** **Description** Perform the toner installation when the developer unit has been replaced. **Purpose** Perform when the developer unit is replaced. **Method** 1. Enter the Service Setting menu. 2. Select [New Developer] using the cursor up/down keys. 3. Press [Yes] in the confirmation display. **Completion** Press the stop key.

Service items	Description
FAX country code	**FAX Country Code** **Description** Initializes software switches and all data in the backup data on the FAX control PWB, according to the destination. **Purpose** To initialize the FAX control PWB. **Method** 1. Enter the Service Setting menu. 2. Select [FAX Country Code] using the cursor up/down keys. 3. Press the start key. 4. Enter a destination code using the numeric keys. 5. Press the start key. The setting is set. 6. Press the start key. Data initialization starts. **Destination code list**

Code	Destination	Code	Destination
000	Japan	253	CTR21 (European nations)
009	Australia		Italy
038	China		Germany
080	Hong Kong		Spain
084	Indonesia		U.K.
088	Israel		Netherlands
097	Korea		Sweden
108	Malaysia		France
126	New Zealand		Austria
136	Peru		Switzerland
137	Philippines		Belgium
152	Middle East		Denmark
156	Singapore		Finland
159	South Africa		Portugal
169	Thailand		Ireland
181	U.S.A.		Norway
242	South America	254	Taiwan
243	Saudi Arabia		

Completion
Press the stop key.

Service items	Description
FAX call Setting	**FAX call setting** **Description** Selects if a fax is to be connected to either a PBX or public switched telephone network. Selects the mode to connect an outside call when connected to a PBX. Access code registration for connection to PSTN. **Purpose** To be executed as required. **Method** 1. Enter the Service Setting menu. 2. Select [FAX Call Set.] using the cursor up/down keys. 3. Press the start key. **Display** / **Description** Exchange Select. — Setting the connection to PBX/PSTN PBX Setting — Setting for a PBX Dial No. to PSTN — Setting access code to PSTN **Setting the connection to PBX/PSTN** 1. Select [Exchange Select.] using the cursor up/down keys. 2. Press the start key. 3. Select [PBX] or [PSTN] using the cursor up/down keys. 4. Press the start key. The setting is set. **Setting for PBX** 1. Select [PBX Setting] using the cursor up/down keys. 2. Press the start key. 3. Select [Loop], [Flash] or [Earth] using the cursor up/down keys. 4. Press the start key. The setting is set. **Setting access code to PSTN** 1. Select [Dial No. to PSTN] using the cursor up/down keys. 2. Press the start key. 3. Enter access code using the numeric keys. (0 to 9, 00 to 99) 4. Press the start key. The setting is set. **Completion** Press the stop key.

Service items	Description
Remote diagnostics	**Setting remote diagnostics** **Description** Sets the remote diagnostics. **Purpose** Used to establish communication between the machine and the service facility when a problem is encounted. **Method** 1. Enter the Service Setting menu. 2. Select [Remote Diag.Set.] using the cursor up/down keys. 3. Press the start key. 4. Select [On] using the cursor up/down keys. 5. Press the start key. The setting is set. 6. Select [Remote Diag. ID] using the cursor up/down keys. 7. Press the start key. 8. Enter the prespecified remote diagnostics ID number (0000 to 9999) using the numeric keys. 9. Press the start key. The setting is set. **Completion** Press the stop key.

This page is intentionally left blank.

1-4-1 Paper misfeed detection

(1) Paper misfeed indication

When a paper misfeed occurs, the machine immediately stops printing and displays the paper misfeed message on the operation panel. To remove paper misfed in the machine, pull out the paper cassette, open the front cover, rear cover or duplexer's cover, or remove the drum unit.

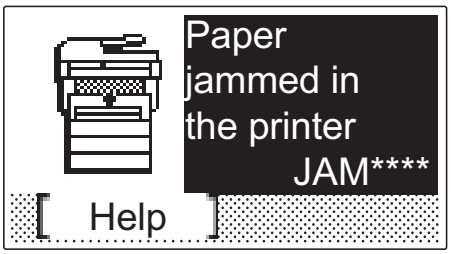

Figure 1-4-1 Paper misfeed indication

(2) Paper misfeed detection condition

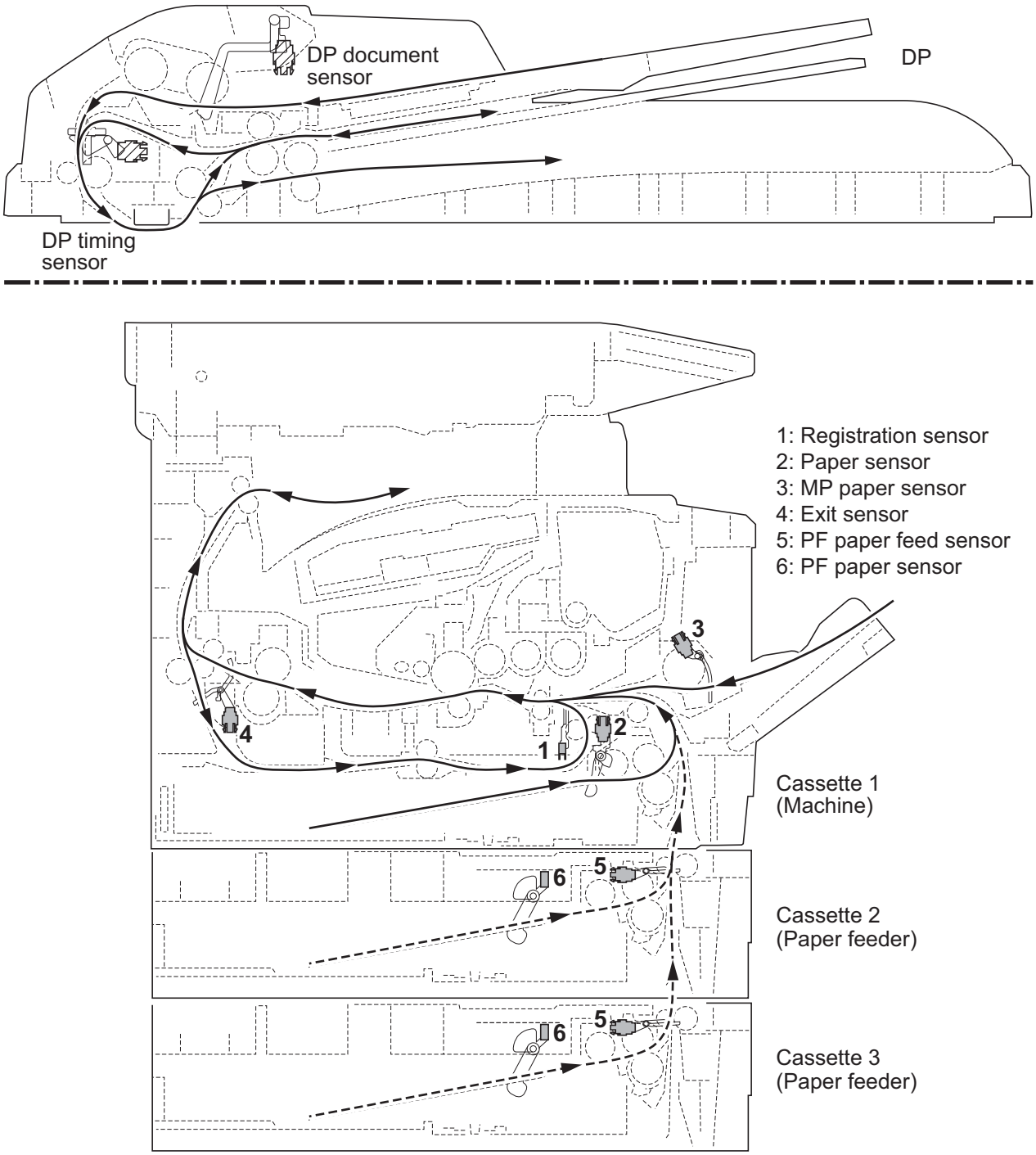

Figure 1-4-2

1-4-2 Self-diagnostic function

(1) Self-diagnostic function

This machine is equipped with self-diagnostic function. When a problem is detected, the machine stops printing and display an error message on the operation panel. An error message consists of a message prompting a contact to service personnel, total print count, and a four-digit error code indicating the type of the error. (The display varies depending on the type of the error.)

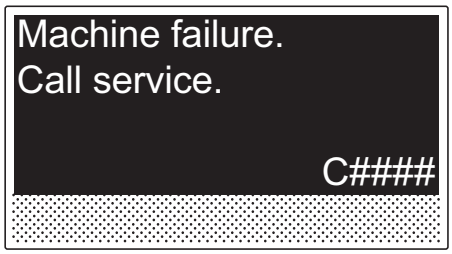

Figure 1-4-3

(2) Self diagnostic codes

Code	Contents	Remarks	
		Causes	Check procedures /corrective measures
0030	**FAX control PWB system error** Processing with the fax software was disabled due to a hardware problem.	Defective FAX control PWB.	Replace the FAX control PWB (See page 1-5-48).
0070	**FAX control PWB incompatible detection Error** Abnormal detection of FAX control PWB incompatibility In the initial communication with the FAX control PWB, any normal communication command is not transmitted.	Defective fax software.	Install the fax software.
		Defective FAX control PWB.	Replace the FAX control PWB (See page 1-5-48).
0100	**Backup memory device error**	Defective flash memory.	Replace the control PWB (See page 1-5-37).
		Defective control PWB.	Replace the control PWB (See page 1-5-37).
0120	**MAC address data error**	Defective flash memory.	Replace the control PWB (See page 1-5-37).
0130	**Backup memory read/write error**	Defective flash memory.	Replace the control PWB (See page 1-5-37).
		Defective control PWB.	Replace the control PWB (See page 1-5-37).
0140	**Backup memory data error**	Defective flash memory.	Replace the control PWB (See page 1-5-37).
		Defective control PWB.	Replace the control PWB (See page 1-5-37).
0150	**Control PWB EEPROM error** Detecting control PWB EEPROM (U17) communication error.	Improper installation control PWB EEPROM (U17).	Check the installation of the EEPROM (U17) and remedy if necessary (See page 1-5-37).
		Defective control PWB.	Replace the control PWB (See page 1-5-37).
		Data damage of control PWB EEPROM (U17).	Contact the Service Administrative Division.
0170	**Billing counting error**	Defective control PWB.	Replace the control PWB (See page 1-5-37).
		Data damage of control PWB EEPROM (U17).	Contact the Service Administrative Division.

Code	Contents	Remarks	
		Causes	Check procedures /corrective measures
0180	**Machine number mismatch** Machine number of main and engine does not match.	The main PWB or the engine PWB were exchanged.	U004 Setting the machine number (See page 1-3-11).
		Data damage of control PWB EEPROM (U17).	Contact the Service Administrative Division.
0420	**Paper feeder communication error** Communication error between control PWB and optional paper feeder.	Improper installation paper feeder.	Follow installation instruction carefully again.
		Defective harness between control PWB (YC30) and paper feeder interface connector, or improper connector insertion.	Reinsert the connector. Also check for continuity within the connector harness. If none, remedy or replace the harness.
		Defective control PWB.	Replace the control PWB (See page 1-5-37).
		Defective harness between PF main PWB (YC5) and paper feeder interface connector, or improper connector insertion.	Reinsert the connector. Also check for continuity within the connector harness. If none, remedy or replace the harness (Refer to the service manual for the paper feeder).
		Defective PF mainPWB.	Replace the PF main PWB (Refer to the service manual for the paper feeder).
0830	**FAX control PWB flash program area checksum error** A checksum error occurred with the program of the FAX control PWB.	Defective fax software.	Install the fax software.
		Defective FAX control PWB.	Replace the FAX control PWB (See page 1-5-48).
0840	**Faults of RTC** The time is judged to go back based on the comparison of the RTC time and the current time or five years or more have passed.	Defective control PWB.	Replace the control PWB (See page 1-5-37).
		The battery is disconnected from the control PWB.	Check visually and remedy if necessary.

Code	Contents	Remarks	
		Causes	Check procedures /corrective measures
0870	**FAX control PWB to control PWB high capacity data transfer problem** High-capacity data transfer between the FAX control PWB and the control PWB of the machine was not normally performed even if the data transfer was retried the specified times.	Improper installation FAX control PWB.	Reinstall the FAX control PWB (See page 1-5-48).
		Defective FAX control PWB or control PWB.	Replace the FAX control PWB or control PWB and check for correct operation. (See page 1-5-48 or 1-5-37).
0920	**Fax file system error** The backup data is not retained for file system abnormality of flash memory of the FAX control PWB.	Defective FAX control PWB.	Replace the FAX control PWB (See page 1-5-48).
2000	**Main motor error** The main motor ready input is not given for 2 s during the main motor is ON.	Defective harness between main motor (CN1) and control PWB (YC17), or improper connector insertion.	Reinsert the connector. Also check for continuity within the connector harness. If none, remedy or replace the harness (See page 1-5-37).
		Defective drive transmission system of the main motor.	Check if the rollers and gears rotate smoothly. If not, grease the bushings and gears. Check for broken gears and replace if any.
		Defective main motor.	Replace the main motor (See page 1-5-49).
		Defective control PWB.	Replace the control PWB (See page 1-5-37).
2610	**PF paper feed motor error (paper feeder)** The PF paper feed motor of cassette 2 ready input is not given for 2 s during the PF paper feed motor is ON.	Defective harness between PF paper feed motor and PF main PWB (YC4), or improper connector insertion.	Reinsert the connector. Also check for continuity within the connector harness. If none, remedy or replace the harness (Refer to the service manual for the paper feeder).
		Defective PF paper feed motor drive transmission system.	Check if the gears rotate smoothly. If not, grease the bushings and gears. Check for broken gears and replace if any.
		Defective PF main motor.	Replace the PF main motor.
		Defective control PWB.	Replace the control PWB (See page 1-5-37).

Code	Contents	Remarks	
		Causes	Check procedures /corrective measures
2620	**PF paper feed motor error (Paper feeder)** The PF paper feed motor of cassette 3 ready input is not given for 2 s during the PF paper feed motor is ON.	Defective harness between PF paper feed motor and PF main PWB (YC4), or improper connector insertion.	Reinsert the connector. Also check for continuity within the connector harness. If none, remedy or replace the harness (Refer to the service manual for the paper feeder).
		Defective PF paper feed motor drive transmission system.	Check if the gears rotate smoothly. If not, grease the bushings and gears. Check for broken gears and replace if any.
		Defective PF main motor.	Replace the PF main motor (Refer to the service manual for the paper feeder).
		Defective control PWB.	Replace the control PWB (See page 1-5-37).
3100	**ISU home position error**	Defective FFC between CCD PWB (YC1) and control PWB (YC8).	Replace the image scanner unit (ISU) (See page 1-5-21).
		Defective FFC between control PWB (YC6) and scanner PWB (YC103), or improper FFC insertion.	Reinsert the FFC. Also check for continuity within the FFC. If none, remedy or replace the FFC.
		Defective home position sensor.	Replace the home position sensor.
		Defective harness between ISU motor and scanner PWB (YC104), or improper connector insertion.	Reinsert the connector. Also check for continuity within the connector harness. If none, remedy or replace the harness.
		Defective ISU motor.	Replace the ISU motor.

Code	Contents	Remarks	
		Causes	Check procedures /corrective measures
3200	**Exposure lamp error** The exposure lamp is not turned on.	Defective FFC between scanner PWB (YC103) and control PWB (YC6), or improper FFC insertion.	Reinsert the FFC. Also check for continuity within the FFC. If none, remedy or replace the FFC.
		Defective FFC between CCD PWB (YC1) and control PWB (YC8).	Replace the image scanner unit (ISU) (See page 1-5-21).
		Defective harness between CCD PWB (YC3) and LED drive PWB (YC1), or improper connector insertion.	Reinsert the connector. Also check for continuity within the connector harness. If none, remedy or replace the harness.
		Defective harness between LED drive PWB (YC2) and exposure lamp, or improper connector insertion.	Reinsert the connector. Also check for continuity within the connector harness. If none, remedy or replace the harness.
		Defective exposure lamp.	Replace the exposure lamp (See page 1-5-27).
		Defective LED drive PWB.	Replace the LED drive PWB (See page 1-5-27).
		Defective control PWB.	Replace the control PWB (See page 1-5-37).
3300	**AGC error** After AGC, correct input is not obtained at CCD.	Defective FFC between CCD PWB (YC1) and control PWB (YC8).	Replace the image scanner unit (ISU) (See page 1-5-21).
		Defective exposure lamp.	Replace the exposure lamp (See page 1-5-27).
		Defective CCD PWB.	Replace the CCD PWB.
		Defective control PWB.	Replace the control PWB (See page 1-5-37).

Code	Contents	Remarks	
		Causes	Check procedures /corrective measures
3500	**CPU - ASIC (CCD PWB) communication error** An error code is detected.	Defective FFC between CCD PWB (YC1) and control PWB (YC8).	Replace the image scanner unit (ISU) (See page 1-5-21).
		Defective CCD PWB.	Replace the CCD PWB.
		Defective control PWB.	Replace the control PWB (See page 1-5-37).
4000	**Polygon motor (laser scanner unit) error** The polygon motor ready input is not given for 6 s during the polygon motor is ON.	Defective harness between polygon motor and control PWB (YC10), or improper connector insertion.	Reinsert the connector. Also check for continuity within the connector harness. If none, remedy or replace the harness.
		Defective laser scanner unit.	Replace the laser scanner unit (See page 1-5-17).
		Defective control PWB.	Replace the control PWB (See page 1-5-37).
4200	**BD error (laser scanner unit) error**	BD sensor does not detect laser beam due to condensation on the polygon mirror.	Turn machine power off for at least 30 minutes, then turn machine on again. If not cured, replace the laser scanner unit (See page 1-5-17).
		Defective laser scanner unit.	Replace the laser scanner unit (See page 1-5-17).
		Defective control PWB.	Replace the control PWB (See page 1-5-37).

Code	Contents	Remarks	
		Causes	Check procedures /corrective measures
6000	**Broken Fuser heater wire** The fuser temperature does not rise after the Fuser heater has been turned on.	Poor contact in the fuser thermistor connector terminals.	Reinsert the connector (See page 1-5-32).
		Poor contact in the Fuser heater connector terminals.	Reinsert the connector (See page 1-5-32).
		Fuser thermistor installed incorrectly.	Replace the fuser unit (See page 1-5-32).
		Fuser thermal cutout triggered.	Replace the fuser unit (See page 1-5-32).
		Fuser heater installed incorrectly.	Replace the fuser unit (See page 1-5-32).
		Broken Fuser heater wire.	Replace the fuser unit (See page 1-5-32).
6020	**Abnormally high fuser thermistor temperature** Fuser thermistor detects abnormally temperature.	Shorted fuser thermistor.	Replace the fuser unit (See page 1-5-32).
		Defective control PWB.	Replace the control PWB (See page 1-5-37).
6030	**Broken fuser thermistor wire** Input from fuser thermistor is 0 (A/D value).	Poor contact in the fuser thermistor connector terminals.	Reinsert the connector (See page 1-5-32).
		Broken fuser thermistor wire.	Replace the fuser unit (See page 1-5-32).
		Fuser thermistor installed incorrectly.	Replace the fuser unit (See page 1-5-32).
		Fuser thermal cutout triggered.	Replace the fuser unit (See page 1-5-32).
		Fuser heater installed incorrectly.	Replace the fuser unit (See page 1-5-32).
		Broken Fuser heater wire.	Replace the fuser unit (See page 1-5-32).

Code	Contents	Remarks	
		Causes	Check procedures /corrective measures
6400	**Zero cross signal error** The zero cross signal does not reach the control PWB for specified time.	Defective harness between high voltage PWB (YC202) and control PWB (YC23), or improper connector insertion.	Reinsert the connector. Also check for continuity within the connector harness. If none, remedy or replace the harness (See page 1-5-37).
		Defective connection between power source PWB (YC103) and high voltage PWB (YC201).	Reinsert the connector.
		Defective power source PWB.	Replace the power source PWB (See page 1-5-40).
		Defective control PWB.	Replace the control PWB (See page 1-5-37).
7990	**Waste toner full** The waste toner sensor has detected that the waste toner reservoir (drum unit) is full.	Waste toner reservoir (drum unit) is full.	Turn the power switch off/on to restart the machine. If the error is not resolved, replace the drum unit (See page 1-5-28).
		Defective waste toner sensor.	Replace the waste toner sensor.
		Defective control PWB.	Replace the control PWB (See page 1-5-37).

Code	Contents	Remarks	
		Causes	Check procedures /corrective measures
F000	**Control PWB - Operation panel PWB communication error**	Defective harness between operation panel PWB (YC1) and control PWB (YC7), or improper connector insertion.	Reinsert the connector. Also check for continuity within the connector harness. If none, remedy or replace the harness.
		Defective operation panel PWB.	Replace the operation panel PWB.
		Defective control PWB.	Replace the control PWB (See page 1-5-37).
F020	**Control PWB RAM checksum error**	Defective main memory (RAM) on the control PWB.	Turn the power switch off/on to restart the machine. If the error is not resolved, replace control PWB (See page 1-5-37).
		Defective expanded memory (DIMM).	Replace the expanded memory (DIMM).
F040	**Control PWB engine communication error** A communication error is detected.	Defective control PWB.	Turn the power switch off/on to restart the machine. If the error is not resolved, replace control PWB (See page 1-5-37).
F041	**Control PWB - scanner PWB communication error** A communication error is detected.	Defective control PWB or scanner PWB.	Turn the power switch off/on to restart the machine. If the error is not resolved, replace control PWB or scanner PWB (See page 1-5-37 or 1-5-47).
F050	**Control PWB engine checksum error**	Some error may have occurred when downloading the firmware of the control PWB.	Download the firmware of the control PWB again (See page 1-6-1).
		Defective control PWB.	Turn the power switch off/on to restart the machine. If the error is not resolved, replace control PWB (See page 1-5-37).
F186	**Control PWB video data control error**	Defective control PWB.	Turn the power switch off/on to restart the machine. If the error is not resolved, replace control PWB (See page 1-5-37).

1-4-3 Image formation problems

(1)Completely blank printout.

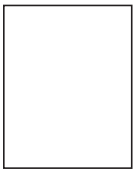

See page 1-4-14

(2)All-black print-out.

See page 1-4-15

(3)Dropouts.

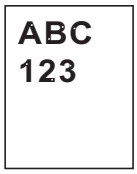

See page 1-4-15

(4)Black dots.

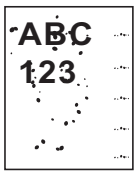

See page 1-4-16

(5)Black horizontal streaks.

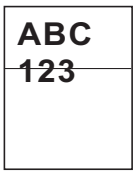

See page 1-4-16

(6)Black vertical streaks.

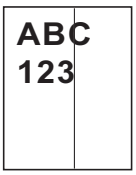

See page 1-4-16

(7)Unsharpness.

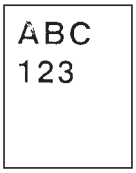

See page 1-4-17

(8)Gray back-ground.

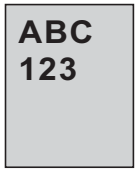

See page 1-4-17

(9)Dirt on the top edge or back of the paper.

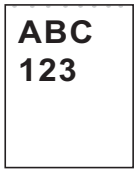

See page 1-4-17

(10)Undulated printing at the right edge (scanning start position).

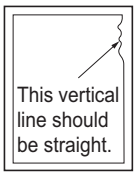

See page 1-4-18

(1) Completely blank printout.

Print example	Causes	Check procedures/corrective measures
	Connection failure with DP connector.	If a blank copy is made because the original loaded in the DP is not fed after the Start key is pressed: Turn the power switch off, investigate the DP connector connection, and firmly connect the DP connector. 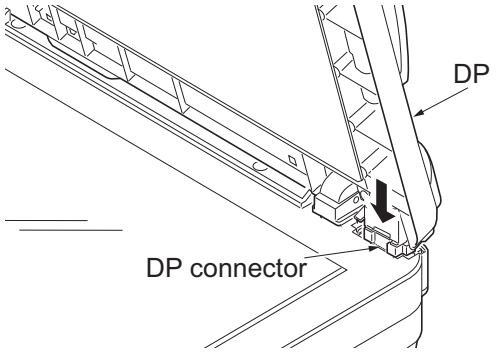
	Defective drum unit or developer unit.	Open the front cover and check that the drum unit and developer unit are correctly seated (See page 1-5-28 and 1-5-27). Investigate that the terminals between the main charger unit and the drum unit are not in loose contact (See page 1-5-28)
	Defective transfer bias output or developer bias output.	Replace the high voltage PWB (See page 1-5-43).
	Poor contact of developer bias terminal (spring) and high voltage output terminal B (J401, J402, J403) on the high voltage PWB. Poor contact of transfer bias terminal (spring) and transfer bias terminal T (J201, J202, J203) on the high voltage PWB.	Check the high voltage PWB visually and correct or replace if necessary (See page 1-5-43).
	Defective laser scanner unit.	Replace the laser scanner unit (See page 1-5-17).
	Defective control PWB.	Replace the control PWB (See page 1-5-37).

(2) All-black printout.

Print example	Causes	Check procedures/corrective measures
	Defective main charger unit.	Open the front cover and check that the drum unit and developer unit are correctly seated (See page 1-5-28 and 1-5-27). Investigate that the terminals between the main charger unit and the drum unit are not in loose contact (See page 1-5-28)
	Poor contact of main charger terminal (spring) and main charger output terminal M on the high voltage PWB.	Check the high voltage PWB visually and correct or replace if necessary (See page 1-5-43).
	Defective main charging output.	Replace the high voltage PWB (See page 1-5-43).
	Broken main charger wire.	Replace the main charger unit (See page 1-5-29).
	Defective control PWB.	Replace the control PWB (See page 1-5-37).

(3) Dropouts.

Print example	Causes	Check procedures/corrective measures
ABC 123	Defective developer roller (developer unit).	If the defects occur at regular intervals of 62.8 mm/2 1/2" (See page 2-4-3), the problem may be the damaged developer roller (in the developer unit). Replace the developer unit (See page 1-5-27).
	Defective drum unit.	If the defects occur at regular intervals of 94 mm/3 11/16" (See page 2-4-3), the problem may be the damaged drum (in the drum unit). Replace the drum unit (See page 1-5-28).
	Defective fuser unit (heat roller or press roller).	If the defects occur at regular intervals of 73.162 mm/2 7/8", or 78.5 mm/3 1/16" (See page 2-4-3), the problem may be the damaged heat roller or press roller (in the fuser unit). Replace fuser unit (See page 1-5-32).
	Defective paper specifications.	Paper with rugged surface or dump tends to cause dropouts. Replace paper with the one that satisfies the paper specifications.
	Defective transfer roller installation.	The transfer roller must be supported by the bushes at the both ends. Clean the bush to remove oil and debris. Replace the transfer roller if necessary (See page 1-5-30).
	Defective transfer bias output.	Replace the high voltage PWB or control PWB (See page 1-5-43 or 1-5-37).

(4) Black dots.

Print example	Causes	Check procedures/corrective measures
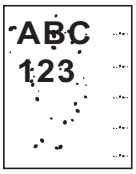	Defective drum unit or developer unit.	If the defects occur at regular intervals of 94 mm/3 11/16" (See page 2-4-3), the problem may be the damaged drum (in the drum unit). Replace drum unit (See page 1-5-28). If the defects occur at random intervals, the toner may be leaking from the developer unit or drum unit. Replace the developer unit or drum unit (See page 1-5-27 or 1-5-28).

(5) Black horizontal streaks.

Print example	Causes	Check procedures/corrective measures
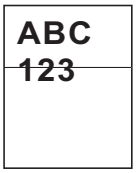	Defective drum unit's ground.	Check that the drum shaft and the grounding tab (machine) are in good contact. Apply the grounding tab a small amount of electroconductive grease as required.
	Defective drum unit.	Replace the drum unit (See page 1-5-28).

(6) Black vertical streaks.

Print example	Causes	Check procedures/corrective measures
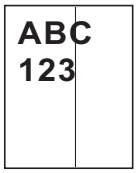	Adhesion of oxide to main charger wire.	Remove the drum unit (See page 1-5-28). Slide the charger cleaner (green) left and right 2 or 3 times to clean the charger wire, then return it to its original position (CLEANER HOME POSITION). Refer to the operation guide.
	Defective drum unit.	A streak of toner remaining on drum after printing means that the cleaning blade (in the drum unit) is not working properly. Replace the drum unit (See page 1-5-28).
	Defective developer roller (developer unit).	Replace the developer unit (See page 1-5-27).

(7) Unsharpness.

Print example	Causes	Check procedures/corrective measures
ABC 123	Defective paper specifications.	Replace paper with the one that satisfies the paper specification.
	Defective transfer roller installation.	The transfer roller must be supported by the bushes at the both ends. Clean the bush to remove oil and debris. Replace the transfer roller if necessary (See page 1-5-30).
	Defective transfer bias output.	Replace the high voltage PWB or control PWB (See page 1-5-43 or 1-5-37).
	EcoPrint mode setting.	The EcoPrint mode can provides faint, unsharp printing because it acts to conserve toner for draft printing purpose. For normal printing, turn the EcoPrint mode off by using the operator panel. For details, refer to the operation guide.

(8) Gray background.

Print example	Causes	Check procedures/corrective measures
ABC 123	Print density setting.	The print density may be set too high. Try adjusting the print density. For details, refer to the operation guide.
	Defective potential on the drum surface.	Replace the drum unit (See page 1-5-28).
	Defective main charger grid.	Clean the main charger grid (See page 1-5-29).
	Defective developer roller (developer unit).	If a developer unit which is known to work normally is available for check, replace the current developer unit in the machine with the normal one. If the symptom disappears, replace the developer unit with a new one (See page 1-5-27).

(9) Dirt on the top edge or back of the paper.

Print example	Causes	Check procedures/corrective measures
ABC 123	Toner contamination in various parts.	Dirty edges and back of the paper can be caused by toner accumulated on such parts as the paper chute guide, paper conveying paths, the bottom of the drum and developer unit, and the fuser unit inlet. Clean these areas and parts to remove toner.
	Defective transfer roller.	If the transfer roller is contaminated with toner, clean the transfer roller using a vacuum cleaner or by continuously printing a low density page until the symptom has faded away.

(10) Undulated printing at the right edge (scanning start position).

Print example	Causes	Check procedures/corrective measures
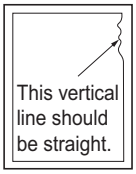	Defective polygon motor (laser scanner unit).	Replace the laser scanner unit (See page 1-5-17).
	Defective control PWB.	Replace the control PWB (See page 1-5-37).

1-4-4 Electric problems

Problem	Causes	Check procedures/corrective measures
(1)The machine does not operate when the power switch is turned on.	1. No electricity at the power outlet.	Measure the input voltage.
	2. The power cord is not plugged in properly.	Check the contact between the power plug and the outlet.
	3. The top cover is not closed completely.	Check the top cover.
	4. Broken power cord.	Check for continuity. If none, replace the cord.
	5. Defective power switch.	Check for continuity across the contacts. If none, replace the power source PWB (See page 1-5-40).
	6. Blown fuse in the power source PWB.	Check for continuity. If none, remove the cause of blowing and replace the power source PWB (See page 1-5-40).
	7. Defective interlock switch.	Check for continuity across the contacts of interlock switch. If none, replace the power source PWB (See page 1-5-40).
	8. Defective power source PWB.	Replace the power source PWB (See page 1-5-40).
	9. Defective control PWB.	Replace the control PWB (See page 1-5-37).
(2)Right cooling fan motor does not operate.	1. Broken right cooling fan motor coil.	Check for continuity across the coil. If none, replace the right cooling fan motor.
	2. Defective harness between right cooling fan motor and control PWB (YC27), or improper connector insertion.	Reinsert the connector. Also check for continuity within the connector harness. If none, remedy or replace the harness.
	3. Defective control PWB.	Replace the control PWB (See page 1-5-37).
(3)Left cooling fan motor does not operate.	1. Broken left cooling fan motor coil.	Check for continuity across the coil. If none, replace the left cooling fan motor.
	2. Defective harness between left cooling fan motor and control PWB (YC104), or improper connector insertion.	Reinsert the connector. Also check for continuity within the connector harness. If none, remedy or replace the harness.
	3. Defective control PWB.	Replace the control PWB (See page 1-5-37).

Problem	Causes	Check procedures/corrective measures
(4)Power source fan motor does not operate.	1. Broken power source fan motor coil.	Check for continuity across the coil. If none, replace the power source fan motor.
	2. Defective harness between power source fan motor and control PWB (YC107), or improper connector insertion.	Reinsert the connector. Also check for continuity within the connector harness. If none, remedy or replace the harness.
	3. Defective control PWB.	Replace the control PWB (See page 1-5-37).
(5)Registration clutch does not operate.	1. Broken registration clutch coil.	Check for continuity across the coil. If none, replace the registration clutch.
	2. Defective harness between registration clutch and control PWB (YC20), or improper connector insertion.	Reinsert the connector. Also check for continuity within the connector harness. If none, remedy or replace the harness.
	3. Defective control PWB.	Replace the control PWB (See page 1-5-37).
(6)Paper feed clutch does not operate.	1. Broken paper feed clutch coil.	Check for continuity across the coil. If none, replace the paper feed clutch.
	2. Defective harness between paper feed clutch and control PWB (YC20), or improper connector insertion.	Reinsert the connector. Also check for continuity within the connector harness. If none, remedy or replace the harness.
	3. Defective control PWB.	Replace the control PWB (See page 1-5-37).
(7)Developer clutch does not operate.	1. Broken developer clutch coil.	Check for continuity across the coil. If none, replace the developer clutch.
	2. Defective harness between developer clutch and control PWB (YC20), or improper connector insertion.	Reinsert the connector. Also check for continuity within the connector harness. If none, remedy or replace the harness.
	3. Defective control PWB.	Replace the control PWB (See page 1-5-37).

Problem	Causes	Check procedures/corrective measures
(8)MP paper feed solenoid does not operate.	1. Broken MP paper feed solenoid coil.	Check for continuity across the coil. If none, replace the MP paper feed solenoid.
	2. Defective harness between MP paper feed solenoid and control PWB (YC21), or improper connector insertion.	Reinsert the connector. Also check for continuity within the connector harness. If none, remedy or replace the harness.
	3. Defective control PWB.	Replace the control PWB (See page 1-5-37).
(9)Duplex solenoid does not operate.	1. Broken duplex solenoid coil.	Check for continuity across the coil. If none, replace the duplex solenoid.
	2. Defective harness between duplex solenoid and control PWB (YC29), or improper connector insertion.	Reinsert the connector. Also check for continuity within the connector harness. If none, remedy or replace the harness.
	3. Defective control PWB.	Replace the control PWB (See page 1-5-37).
(10)Cleaning lamp does not turn on.	1. Defective harness between cleaning lamp (YC701) and control PWB (YC28), or improper connector insertion.	Reinsert the connector. Also check for continuity within the connector harness. If none, remedy or replace the harness.
	2. Defective cleaning lamp (PWB).	Replace the cleaning lamp (PWB).
	3. Defective control PWB.	Replace the control PWB (See page 1-5-37).
(11)Paper indicator is flashing when paper is present in the cassette.	1. Defective paper sensor.	Replace the paper sensor.
	2. Defective harness between paper sensor and control PWB (YC18), or improper connector insertion.	Reinsert the connector. Also check for continuity within the connector harness. If none, remedy or replace the harness.

Problem	Causes	Check procedures/corrective measures
(12)A paper jam in the paper feed/ conveying section or fuser section is indicated when the main power switch is turned on.	1. A piece of paper torn from paper is caught around registration sensor or exit sensor.	Check and remove if any.
	2. Defective registration sensor on the high voltage PWB.	Replace the high voltage PWB (See page 1-5-43).
	3. Defective exit sensor.	Replace the exit sensor.
(13)Attention indicator is lit when the front cover is closed.	1. Defective interlock switch on the power source PWB.	Check for continuity across the interlock switch. If there is no continuity when the interlock switch is on, replace the power source PWB (See page 1-5-40).
(14)When the trouble occurs in the DP.		Refer to the DP's service manual.

1-4-5 Mechanical problems

Problem	Causes/check procedures	Corrective measures
(1)No primary paper feed.	Check if the surfaces of the paper feed roller is dirty with paper powder.	Clean with isopropyl alcohol.
	Check if the paper feed roller is deformed.	Check visually and replace any deformed paper feed roller (assembly) (See page 1-5-6).
	Defective paper feed clutch installation.	Check visually and remedy if necessary.
(2)No secondary paper feed.	Check if the surfaces of the upper and lower registration rollers are dirty with paper powder.	Clean with isopropyl alcohol.
	Defective registration clutch installation.	Check visually and remedy if necessary.
(3)Skewed paper feed.	Paper width guide in a cassette installed incorrectly.	Check the paper width guide visually and correct or replace if necessary.
(4)Multiple sheets of paper are fed at one time.	Check if the separator pad or MPF separation pad is worn.	Replace the separator pad if it is worn.
	Check if the paper is curled.	Replace the paper.
(5)Paper jams.	Check if the paper is excessively curled.	Replace the paper.
	Check if the contact between the upper and lower registration rollers is correct.	Check visually and remedy if necessary.
	Check if the heat roller or press roller is extremely dirty or deformed.	Replace the fuser unit (See page 1-5-32).
	Check if the contact between the ejection roller and fuser ejection pulley is correct.	Check visually and remedy if necessary.
(6)Toner drops on the paper conveying path.	Check if the drum unit or developer unit is extremely dirty.	Clean the drum unit or developer unit (See page 1-5-28 or 1-5-27).
(7)Abnormal noise is heard.	Check if the pulleys, rollers and gears operate smoothly.	Grease the bearings and gears.
	Check if the following electromagnetic clutches are installed correctly: Paper feed clutch, registration clutch and developer clutch.	Check visually and remedy if necessary.
(8)When the trouble occurs in the DP.		Refer to the DP's service manual.

1-4-6 Send error code

This section describes the scanning errors and descriptions, preventive actions, as well as corrective actions.
Error codes not described here could fall within software errors.
If such an error is encountered, turn power off then on, and advise the service representative.

(1) Scan to SMB error codes

Code	Contents	Check procedures/corrective measures
1101	Host destined does not exist on the network.	1. Confirm the destined host. 2. Confirm thedevice's network parameters. 3. Confirm the parameters of the network to which the device is connected are correct.
1102	Login to the host has failed.	1. Confirm user name and password. 2. Confirm the parameters of the network to which the device is connected are correct. 3. Check the host if the folder is properly shared.
1103	Destined host, folder, and/or file names are invalid.	1. Check illegal characters are not contained within these names. 2. Check the name of the folder and files conform with the naming syntax. 3. Confirm destined host and folder.
1105	SMB protocol is not enabled.	1. Confirm device's SMB protocols.
2101	Login to the host has failed.	1. Confirm the destined host. 2. Confirm that the LAN cable is properly connected to the device. 3. Check the SMB port number. 4. Confirm the device's network parameters. 5. Confirm the parameters of the network to which the device is connected are correct.
2201	Writing scanned data has failed.	1. Check the file name to save the scanned data. 2. Confirm the device's network parameters. 3. Confirm the parameters of the network to which the device is connected are correct.
2203	No response from the host during a certain period of time.	1. Confirm the network parameters the device is connected. 2. Confirm that the LAN cable is properly connected to the device.

(2) Scan to FTP error codes

Code	Contents	Check procedures/corrective measures
1101	FTP server does not exist on the network.	1. Check the FTP server name. 2. Confirm device's network parameters. 3. Confirm the parameters of the network to which the device is connected are correct.
1102	Login to the FTP server has failed.	1. Confirm user name and password. 2. Check the FTP server name.
1103	Destined folder is invalid.	1. Check that the illegal characters are not contained within these names. 2. Check the FTP server name.
1105	FTP protocol is not enabled.	1. Confirm device's FTP protocols.
1131	Initializing TLS has failed.	1. Confirm device's security parameters.
1132	TLS negotiation has failed.	1. Confirm device's security parameters. 2. Check the FTP server name.
2101	Access to the FTP server has failed.	1. Check the FTP server name. 2. Confirm that the LAN cable is properly connected to the device. 3. Check the FTP port number. 4. Confirm device's network parameters. 5. Confirm the network parameters the device is connected. 6. Check the FTP server name.
2102	Access to the FTP server has failed. (Connection timeout)	1. Check the FTP server name. 2. Check the FTP port number. 3. Confirm device's network parameters. 4. Confirm the network parameters the device is connected. 5. Check the FTP server name.
2103	The server cannot establish communication.	1. Check the FTP server name. 2. Check the FTP port number. 3. Confirm device's network parameters. 4. Confirm the network parameters the device is connected. 5. Check the FTP server name.
2201	Connection with the FTP server has failed.	1. Confirm device's network parameters. 2. Confirm the network parameters the device is connected. 3. Confirm destined folder. 4. Check the FTP server name.
2202	Connection with the FTP server has failed. (Timeout)	1. Confirm device's network parameters. 2. Confirm the network parameters the device is connected.
2203	No response from the server during a certain period of time.	1. Confirm device's network parameters. 2. Confirm the network parameters the device is connected.

Code	Contents	Check procedures/corrective measures
2231	Connection with the FTP server has failed. (FTPS communication)	1. Confirm device's network parameters. 2. Confirm the network parameters the device is connected.
3101	FTP server responded with an error.	1. Confirm device's network parameters. 2. Confirm the network parameters the device is connected. 3. Check the FTP server.

(3) Scan to E-mail error codes

Code	Contents	Check procedures/corrective measures
1101	SMTP/POP3 server does not exist on the network.	1. Check the SMTP/POP3 server name. 2. Confirm device's network parameters. 3. Confirm the parameters of the network to which the device is connected are correct.
1102	Login to the SMTP/POP3 server has failed.	1. Confirm user name and password. 2. Check the SMTP/POP3 server.
1104	The domain the destined address belongs is prohibited by scanning restriction.	1. Confirm device's SMTP parameters.
1105	SMTP protocol is not enabled.	1. Confirm device's SMTP protocols.
1106	Sender’s address is not specified.	1. Confirm device's SMTP protocols.
2101	Connection to the SMTP/POP3 server has failed.	1. Check the SMTP/POP3 server name. 2. Confirm that the LAN cable is properly connected to the device. 3. Check the SMTP/POP3 port number. 4. Confirm device's network parameters. 5. Confirm the network parameters the device is connected. 6. Check the SMTP/POP3 server.
2102	Connection to the SMTP/POP3 server has failed. (Connection timeout)	1. Check the SMTP/POP3 server name. 2. Check the SMTP/POP3 port number. 3. Confirm device's network parameters. 4. Confirm the network parameters the device is connected. 5. Check the SMTP/POP3 server.
2103	The server cannot establish communication.	1. Check the SMTP/POP3 server name. 2. Check the SMTP/POP3 port number. 3. Confirm device's network parameters. 4. Confirm the network parameters the device is connected. 5. Check the SMTP/POP3 server.
2201	Connection to the SMTP/POP3 server has failed.	1. Confirm device's network parameters. 2. Confirm the network parameters the device is connected.
2202	Connection to the SMTP/POP3 server has failed. (Timeout)	1. Confirm device's network parameters. 2. Confirm the network parameters the device is connected.
2204	The size of scanning exceeded its limit.	1. Confirm device's network parameters.
3101	SMTP/POP3 server responded with an error.	1. Confirm device's network parameters. 2. Confirm the network parameters the device is connected. 3. Check the SMTP/POP3 server.
3201	No SMTP authentication is found.	1. Check the SMTP server. 2. The device supports SMTP authentication services including CRAM-MD5, DIGEST-MD5, PLAIN and LOGIN.

Code	Contents	Check procedures/corrective measures
4803	Failed to establish the SSL session.	1. Verify the self certificate of the device. 2. Check the server certificate of the SMTP/POP3 server. 3. Check the SMTP/POP3 configuration of the device and the SMTP/POP3 server.

1-4-7 Error codes

(1) Error code

Error codes are listed on the communication reports, activity report, etc. The codes consist of an error code indication U followed by a 5-digit number. (Error codes for V34 communication errors start with an E indication, followed by five digits.)
The upper three of the five digits indicate general classification of the error and its cause, while the lower two indicate the detailed classification. Items for which detailed classification is not necessary have 00 as the last two digits.

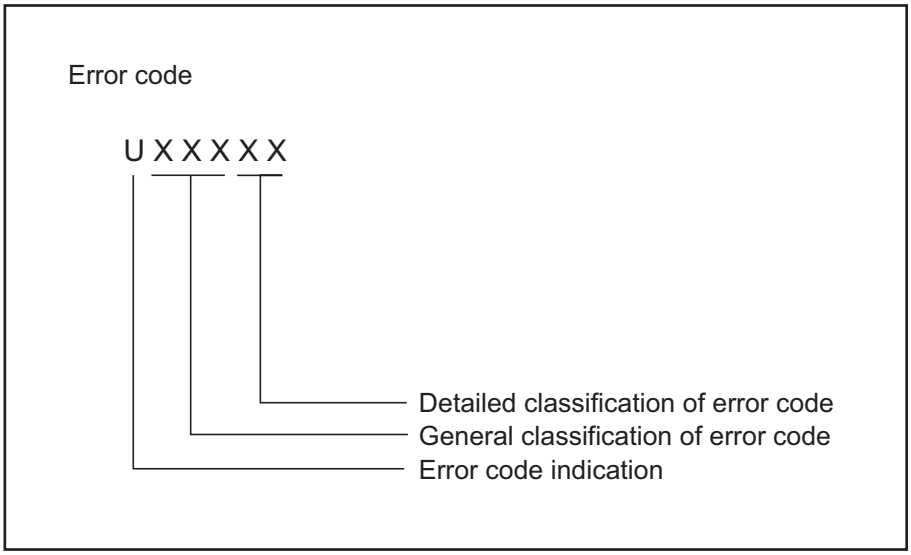

Figure 1-4-4

(2) Table of general classification

Error code	Description
U00000	No response or busy after the set number of redials.
U00100	Transmission was interrupted by a press of the stop/clear key.
U00200	Reception was interrupted by a press of the stop/clear key.
U00300	Recording paper on the destination unit has run out during transmission.
U004XX	A connection was made but interrupted during handshake with the receiver unit (See page 1-4-33).
U00500	Multiple communication was interrupted and call was not made on destination units after interruption.
U006XX	Communication was interrupted because of a machine problem (See page 1-4-34).
U00700	Communication was interrupted because of a problem in the destination unit.
U008XX	A page transmission error occurred in G3 mode (See page 1-4-34).
U009XX	A page reception error occurred in G3 mode (See page 1-4-34).
U010XX	Transmission in G3 mode was interrupted by a signal error (See page 1-4-35).
U011XX	Reception in G3 mode was interrupted by a signal error (See page 1-4-37).
U01400	An invalid one-touch key was specified during communication.
U01500	A communication error occurred when calling in V.8 mode.
U01600	A communication error occurred when called in V.8 mode.
U017XX	A communication error occurred before starting T.30 protocol during transmission in V.34 mode (See page 1-4-38).
U018XX	A communication error occurred before starting T.30 protocol during reception in V.34 mode (See page 1-4-39).
U02000	Relay broadcast was refused by a relay station because of a mismatch in permit ID number and permit telephone number when a relay command was issued.
U02100	A relay command failed because the destination unit (relay station) had no relay broadcast capability.
U02200	A relay command from a command station failed because a telephone number that was not registered in the relay station was specified. Or, relay broadcast was requested to a relay station but failed because a telephone number that was not registered in the relay station was specified. Or, Subaddress-based relay broadcast transmission failed because the data registered in the Subaddress relay box was deleted.
U023XX	Receiving station information was not normally received in reception of a relay command (See page 1-4-39).
U02400	An interoffice subaddress-based relay transmission was interrupted because of a mismatch in the specified relay box number.
U03000	No document was present in the destination unit when polling reception started.
U03100	In reverse polling, although no original was set in the destination unit, transmission was complete.
U03200	In confidential polling reception, data was not accumulated in the specified box in the destination unit. Or, in interoffice subaddress-based bulletin board reception, data was not stored in the box specified by the destination unit.

Error code	Description
U03300	In polling reception from a unit of our make, operation was interrupted due to a mismatch in permit ID or telephone number. Or, in interoffice subaddress-based bulletin board reception, operation was interrupted due to a mismatch in permit ID or telephone number.
U03400	Polling reception was interrupted because of a mismatch in individual numbers (destination unit is either of our make or by another manufacturer).
U03500	In confidential polling reception, the specified confidential box No. was not registered in the destination. Or, in interoffice subaddress-based bulletin board reception, the specified Subaddress confidential box number was not registered in the destination unit. Or, the destination was being accessed.
U03600	Confidential polling reception was interrupted because of a mismatch in specified confidential box No. Or, an interoffice subaddress-based bulletin board reception was interrupted because of a mismatch in the specified subaddress confidential box number.
U03700	Confidential polling reception failed because the destination unit had no confidential polling transmission capability or data was not accumulated in any box in the destination unit. Or, interoffice subaddress-based bulletin board reception failed because the destination unit had no subaddress-based bulletin board transmission capability, or data was not stored in any subaddress confidential box in the destination unit.
U04000	The confidential box specified for confidential transmission was not registered in the destination unit. Or, in interoffice subaddress-based transmission mode, the specified subaddress box number was not registered in the destination unit. Or, the destination was being accessed.
U04100	Confidential transmission failed because the destination unit had no confidential capability. Or, subaddress-based transmission failed because the destination unit had no subaddress-based reception capability.
U04200	In encrypted transmission, the specified encryption box was not registered in the destination unit.
U04300	Encrypted transmission failed because the destination unit had no encrypted communication capability.
U044XX	Communication was interrupted because of an encryption key error during encrypted transmission (See page 1-4-39).
U04500	Encrypted reception was interrupted because of a mismatch in encryption keys.
U05000	In transmission with a specified number, the set number of originals was different from the number of transmitted originals.
U05100	Password check transmission or restricted transmission was interrupted because the permit ID's did not agree with.
U05200	Password check reception or restricted reception was interrupted because the permit ID's did not match, the rejected FAX number's did match, or the destination receiver did not return its phone number.
U05300	The password check reception or the restricted reception was interrupted because the permitted numbers did not match, the rejected numbers did match, or the machine in question did not acknowledge its phone number.
U09000	G3 communication was attempted but failed because the destination unit was a G2 machine.

Error code	Description
U12000	Relay broadcast was requested from a command station but memory overflowed during reception. Or, in subaddress-based relay reception, memory overflowed.
U12100	Relay was commanded but memory overflowed in the destination unit (relay station).
U14000	Memory overflowed during confidential reception. Or, in subaddress-based confidential reception, memory overflowed.
U14100	Memory overflowed in the destination unit during confidential transmission. Or, in interoffice subaddress-based transmission, memory overflowed in the destination unit.
U19000	Memory overflowed during memory reception.
U19100	Memory overflowed in the destination unit during transmission.
U19200	Memory transmission failed because a decoding error occurred.
U19300	Transmission failed because an error occurred during JBIG encoding.
U19400	Reception failed because an error occurred during JBIG decoding.

(2-1) U004XX error code table: Interrupted phase B

Error code	Description
U00420	A relay request was received from the host center but interrupted because of a mismatch in permit ID or telephone number.
U00421	Subaddress-based relay reception was interrupted because of a mismatch in the specified subaddress relay box number.
U00430	Polling request (confidential or reverse) was received but interrupted because of a mismatch in permit number. Or, subaddress-based bulletin board transmission request was received but interrupted because of a mismatch in permit ID in the transmitting unit.
U00431	Confidential polling transmission was interrupted because the specified confidential box No. was not registered. Or, an subaddress-based bulletin board transmission was interrupted because the specified subaddress confidential box was not registered.
U00432	Confidential polling transmission was interrupted because of a mismatch in confidential box ID number. Or, an subaddress-based bulletin board transmission was interrupted because of a mismatch in Subaddress confidential box numbers.
U00433	Confidential polling request was received but data was not present in the confidential box. Or, subaddress-based bulletin board transmission request was received but data was not present in the subaddress confidential box.
U00434	Confidential polling request was received but interrupted because the specified confidential box No. was intended for encryption.
U00435	Confidential polling request was received but interrupted because the specified confidential box was being accessed. Or, subaddress-based bulletin board transmission request was received but interrupted because the specified subaddress confidential box was being accessed.
U00440	Confidential reception was interrupted because the specified confidential box No. was not registered. Or, subaddress-based confidential reception or subaddress-based relay reception was interrupted because the specified subaddress box was not registered. Or, subaddress based confidential reception or subaddress relay command reception was interrupted because the specified subaddress box No. was being accessed.
U00441	Confidential reception was interrupted because the specified confidential box No. was intended for encryption.
U00450	The destination transmitter disconnected because the permit ID's did not agree with while the destination transmitter is in password-check transmission or restricted transmission.
U00460	Encrypted reception was interrupted because the specified encryption box number was not registered. Or, encrypted reception request was received but interrupted because the specified encryption box was being accessed.
U00462	Encrypted reception was interrupted because the encryption key for the specified encryption box was not registered.

(2-2) U006XX error code table: Problems with the unit

Error code	Description
U00600	The document processor cover is open.
U00601	Document jam or the document length exceeds the maximum.
U00602	Image scanning section problem.
U00603	No document feed.
U00604	Document length exceeded the limit of the bitmap memory capacity.
U00610	Recording section cover is open.
U00611	Recording paper JAM
U00613	Image writing section problem
U00614	Nearly empty of recording paper
U00615	Empty of recording paper
U00620	Copier fixing unit problem
U00622	Copier drive motor problem
U00655	CTS was not activated after RTS due to a modem error.
U00656	Data was not transmitted after CTS was activated due to a modem error.
U00670	Power was cut off during communication.
U00677	There was no file to transmit in the memory transmission mode.
U00690	System error.

(2-3) U008XX error code table: Page transmission error

Error code	Description
U00800	A page transmission error occurred because of reception of a RTN or PIN signal.
U00810	A page transmission error reoccurred after retry of transmission in the ECM mode.

(2-4) U009XX error code table: Page reception error

Error code	Description
U00900	An RTN or PIN signal was transmitted because of a page reception error.
U00910	A page reception error remained after retry of transmission in the ECM mode.

(2-5) U010XX error code table: G3 transmission

Error code	Description
U01000	An FTT signal was received for a set number of times after TCF signal transmission at 2400 bps. Or, an RTN signal was received in response to a Q signal (excluding EOP) after transmission at 2400 bps.
U01001	Function of the unit differs from that indicated by a DIS signal.
U01010	No relevant signal was received after transmission of a DNL (MPS or EOM) signal, and the preset number of command retransfers was exceeded (between units of our make).
U01011	No relevant signal was received after transmission of a DCS, TCF signal, and the preset number of command retransfers was exceeded.
U01012	No relevant signal was received after transmission of an NSS1, NSS2 (TCF) signal, and the preset number of command retransfers was exceeded (between units of our make).
U01013	No relevant signal was received after transmission of an NSS3, TCF signal, and the preset number of command retransfers was exceeded (between units of our make).
U01014	No relevant signal was received after transmission of an MPS signal, and the preset number of command retransfers was exceeded.
U01015	No relevant signal was received after transmission of an EOM signal, and the preset number of command retransfers was exceeded.
U01016	An MCF signal was received but no DIS signal was received after transmission of an EOM signal, and T1 timeout was detected.
U01017	No relevant signal was received after transmission of an EOP signal, and the preset number of command retransfers was exceeded.
U01018	No relevant signal was received after transmission of a PRI-EOP signal, and the preset number of command retransfers was exceeded.
U01019	No relevant signal was received after transmission of a CNC signal, and the preset number of command retransfers was exceeded (between units of our make).
U01020	No relevant signal was received after transmission of a CTC signal, and the preset number of command retransfers was exceeded (ECM).
U01021	No relevant signal was received after transmission of an EOR.Q signal, and the preset number of command retransfers was exceeded (ECM).
U01022	No relevant signal was received after transmission of an RR signal, and the preset number of command retransfers was exceeded (ECM).
U01023	No relevant signal was received after transmission of a PSS.NULL signal, and the preset number of command retransfers was exceeded (ECM).
U01024	No relevant signal was received after transmission of a PSS.MPS signal, and the preset number of command retransfers was exceeded (ECM).
U01025	No relevant signal was received after transmission of a PPS.EOM signal, and the preset number of command retransfers was exceeded (ECM).
U01026	No relevant signal was received after transmission of a PPS.EOP signal, and the preset number of command retransfers was exceeded (ECM).
U01027	No relevant signal was received after transmission of a PPS.PRI-EOP signal, and the preset number of command retransfers was exceeded (ECM).
U01028	T5 time-out was detected during ECM transmission (ECM).

Error code	Description
U01040	A DCN or other inappropriate signal was received during standby for DIS signal reception.
U01041	A DCN signal was received after transmission of a DNL (MPS or EOM) signal (between units of our make).
U01042	A DCN signal was received after transmission of a DCS, TCF signal.
U01043	A DCN signal was received after transmission of an NSS1, NSS2 (TCF) signal (between units of our make).
U01044	A DCN signal was received after transmission of an NSS3, TCF signal (between units of our make).
U01045	A DCN or other inappropriate signal was received after transmission of an MPS signal.
U01046	A DCN or other inappropriate signal was received after transmission of an EOM signal.
U01047	A DCN or other inappropriate signal was received after transmission of an EOP signal.
U01048	A DCN signal was received after transmission of a PRI-EOP signal.
U01049	A DCN signal was received after transmission of a CNC signal (between units of our make).
U01050	A DCN signal was received after transmission of a CTC signal (ECM).
U01051	A DCN signal was received after transmission of an EOR.Q signal (ECM).
U01052	A DCN signal was received after transmission of an RR signal (ECM).
U01053	A DCN signal was received after transmission of a PPS.NULL signal (ECM).
U01054	A DCN signal was received after transmission of a PPS.MPS signal (ECM).
U01055	A DCN signal was received after transmission of a PPS.EOM signal (ECM).
U01056	A DCN signal was received after transmission of a PPS.EOP signal (ECM).
U01057	A DCN signal was received after transmission of a PPS.PRI-EOP signal (ECM).
U01070	Polarity reversal was detected during handshake.
U01071	Polarity reversal was detected during message transmission.
U01072	A break in loop current was detected during transmission.
U01073	During reverse polling in V.34 mode at the receiver unit, a CM signal was not detected when transmitting after reception.
U01080	A PIP signal was received after transmission of a PPS.NULL signal.
U01091	During transmission in V.34 mode, communication was interrupted because a PPR signal was received over 10 times even after reducing the communication speed to the minimum with the symbol speed maintained at the level of connection.
U01092	During transmission in V.34 mode, communication was interrupted because of an impossible combination of the symbol speed and communication speed.

(2-6) U011XX error code table: G3 reception

Error code	Description
U01100	Function of the unit differs from that indicated by a DCS signal.
U01101	Function of the unit (excl. communication mode select) differs from that indicated by an NSS signal.
U01102	A DTC (NSC) signal was received when no transmission data was in the unit.
U01110	No response after transmission of a DIS signal.
U01111	No response after transmission of a DTC (NSC) signal.
U01112	No training reception after reception of a DCS or NSS signal.
U01113	No response after transmission of an FTT signal.
U01114	No message reception after transmission of a CFR signal.
U01115	No message reception after transmission of an MCF signal.
U01116	No message reception after transmission of a PPR signal.
U01117	No message reception after transmission of a CTR signal.
U01118	No message reception after transmission of an ERR signal.
U01119	No further signals were received after reception of a message.
U01120	No response after transmission of an MCF signal.
U01121	No response after transmission of an RTP signal.
U01122	No response after transmission of an RTN signal.
U01123	No response after transmission of a PIP signal.
U01124	No response after transmission of a PIN signal.
U01125	No response after transmission of a CNS signal (between units of our make).
U01126	No response after transmission of a PPR signal (ECM).
U01127	No response after transmission of an ERR signal (ECM).
U01128	No response after transmission of an RNR signal (ECM).
U01129	No response after transmission of an SPA signal (short protocol).
U01140	A DCN signal was received after transmission of a DIS signal.
U01141	A DCN signal was received after transmission of a DTC signal.
U01142	A DCN signal was received after transmission of a DCS or NSS signal.
U01143	A DCN signal was received after transmission of an FTT signal.
U01144	A DCN signal was received after transmission of a CFR signal.
U01145	A DCN signal was received after reception of a message.
U01146	A DCN signal was received after transmission of an MCF signal (interoffice communication after reception of an MPS, EOM signal or confidential interoffice communication).
U01147	A DCN signal was received after transmission of an RTP signal.
U01148	A DCN signal was received after transmission of an RTN signal.
U01149	A DCN signal was received after transmission of a PIP signal.
U01150	A DCN signal was received after transmission of a PIN signal.
U01151	A DCN signal was received after transmission of a PPR signal (ECM).

Error code	Description
U01152	A DCN signal was received after transmission of a CTR signal (ECM).
U01153	A DCN signal was received after transmission of an ERR signal (ECM).
U01154	A DCN signal was received after transmission of an RNR signal (ECM).
U01155	A DCN signal was received after transmission of an SPA signal (short protocol).
U01160	During message reception, transmission time exceeded the maximum transmission time per line.
U01161	Number of error lines exceeded limits during message reception.
U01162	A break in loop current was detected during message reception.
U01163	Polarity reversal was detected during message reception.
U01164	One page length exceeded the specified length during message reception.
U01170	A decoding error occurred during MMR message reception.
U01172	During reverse polling in V.34 mode at the transmitting unit, a JM signal was not detected after transmission of a CM signal when receiving after transmission.
U01191	Communication was interrupted because an error occurred during an image data reception sequence in the V.34 mode.
U01199	A DIS signal with different FIF was received after transmission of a DIS signal.

(2-7) U017XX error code table: V.34 transmission

Error code	Description
U01700	A communication error occurred in phase 2 (line probing).
U01720	A communication error occurred in phase 4 (modem parameter exchange).
U01721	Operation was interrupted due to the absence of a common communication speed between units.

U01700: A communication error that occurs at the transmitting unit in the period after transmission of INFO0 before entering phase 3 (primary channel equivalent device training). For example, INFO0/A/Abar (B/Bbar, for polling transmission)/INFOh was not detected.
U01720: A communication error that occurs at the transmitting unit in the period after initiating the control channel before entering the T.30 process. For example, PPh/ALT/MPh/E was not detected.
U01721: In the absence of a common communication speed between units (including when an impossible combination of communication speed and symbol speed occurs) after MPh exchange; 1) a DCN signal was received from the destination unit, and the line was cut; or 2) a DIS (NSF, CSI) signal was received from the destination unit and, in response to the signal, the unit transmitted a DCN signal, and the line was cut.

(2-8) U018XX error code table: V.34 reception

Error code	Description
U01800	A communication error occurred in phase 2 (line probing).
U01810	A communication error occurred in phase 3 (primary channel equivalent device training).
U01820	A communication error occurred in phase 4 (modem parameter exchange).
U01821	Operation was interrupted due to the absence of a common communication speed between units.

U01800: A communication error that occurs at the receiver unit in the period after transmission of INFO0 before entering phase 3 (primary channel equivalent device training). For example, INFO0/B/Bbar (A/Abar, for polling reception)/probing tone was not detected.
U01810: A communication error that occurs at the receiver unit in phase 3 (primary channel equivalent device training).
For example, S/Sbar/PP/TRN was not detected.
U01820: A communication error that occurs at the receiver unit in the period after initiating the control channel before entering the T.30 process. For example, PPh/ALT/MPh/E was not detected.
U01821: In the absence of a common communication speed between units (including when an impossible combination of communication speed and symbol speed occurs) after MPh exchange, a DCN signal was transmitted to the destination unit and the line was cut.

(2-9) U023XX error code table: Relay command abnormal reception

Error code	Description
U02303	Timeout was detected before a correct DNL signal was received.
U02304	A signal other than MPS or EOM signal was received after a DNL signal was received.

(2-10) U044XX error code table: Encrypted transmission

Error code	Description
U04400	Encrypted transmission was interrupted because encryption keys did not agree.
U04401	Calling failed during encrypted transmission because the encryption key was not registered.

This page is intentionally left blank.

1-5-1 Precautions for assembly and disassembly

(1) Precautions

Before starting disassembly, press the Power key on the operation panel to off. Make sure that the Power lamp is off before turning off the power switch. Unplug the power cable from the wall outlet.
When the fax kit is installed, be sure to disconnect the modular code before starting disassembly.
When handling PWBs (printed wiring boards), do not touch parts with bare hands.
The PWBs are susceptible to static charge.
Do not touch any PWB containing ICs with bare hands or any object prone to static charge.
When removing the hook of the connector, be sure to release the hook.
Take care not to get the cables caught.
To reassemble the parts, use the original screws. If the types and the sizes of screws are not known, refer to the PARTS LIST.

(2) Drum unit

Note the following when handling or storing the drum unit.
When removing the drum unit, never expose the drum surface to strong direct light.
Do not leave it for a long time even if it is weak light such as fluorescent lamps.
Keep the drum unit at an ambient temperature between -20°C/-4°F and 40°C/104°F and at a relative humidity not higher than 85% RH. Avoid abrupt changes in temperature and humidity.
Avoid exposure to any substance which is harmful to or may affect the quality of the drum unit.
Do not touch the drum surface with any object. Should it be touched by hands or stained with oil, clean it.

(3) Toner

Store the toner container in a cool, dark place.
Avoid direct light and high humidity.

(4) How to tell a genuine Kyocera Mita toner container

As a means of brand protection, the Kyocera Mita toner container utilizes an optical security technology to enable visual validation. A validation viewer is required to accomplish this.
Hold the validation viewer over the left side part of the brand protection seal on the toner container. Through each window of the validation viewer, the left side part of the seal should be seen as follows:

A black-colored band when seen through the left side window (●)

A shiny or gold-colored band when seen through the right side window (☼)

The above will reveal that the toner container is a genuine Kyocera Mita branded toner container, otherwise, it is a counterfeit.

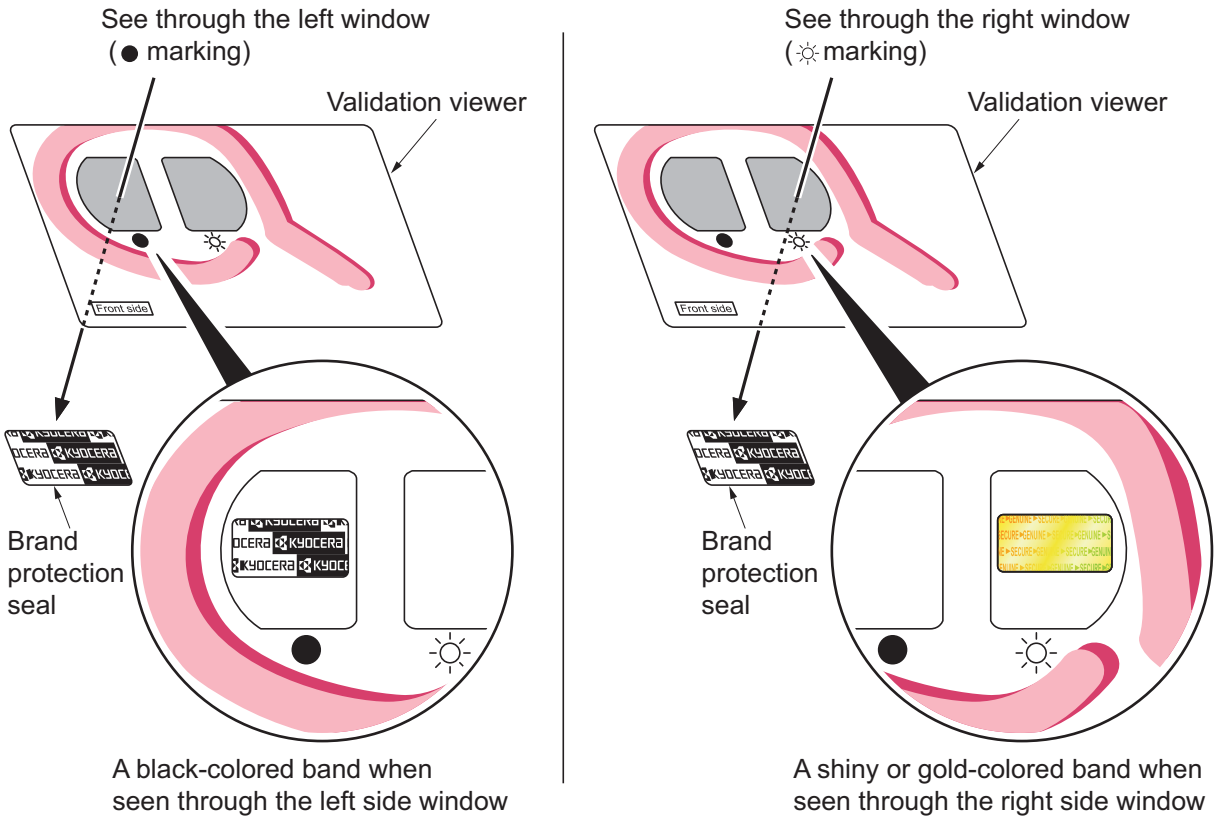

Figure 1-5-1

The brand protection seal has an incision as shown below to prohibit reuse.

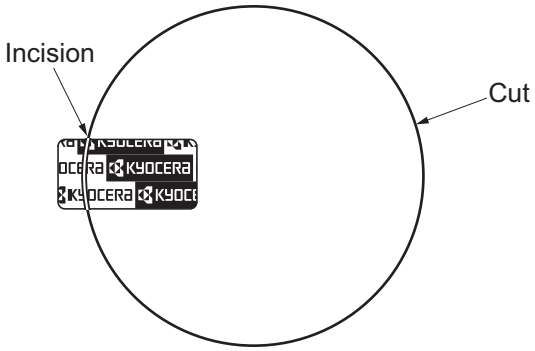

Figure 1-5-2

1-5-2 Outer covers

(1) Detaching and refitting the left cover and right cover

Procedure

1. Remove the screw.
2. Unhook four hooks and then remove the rear upper cover.

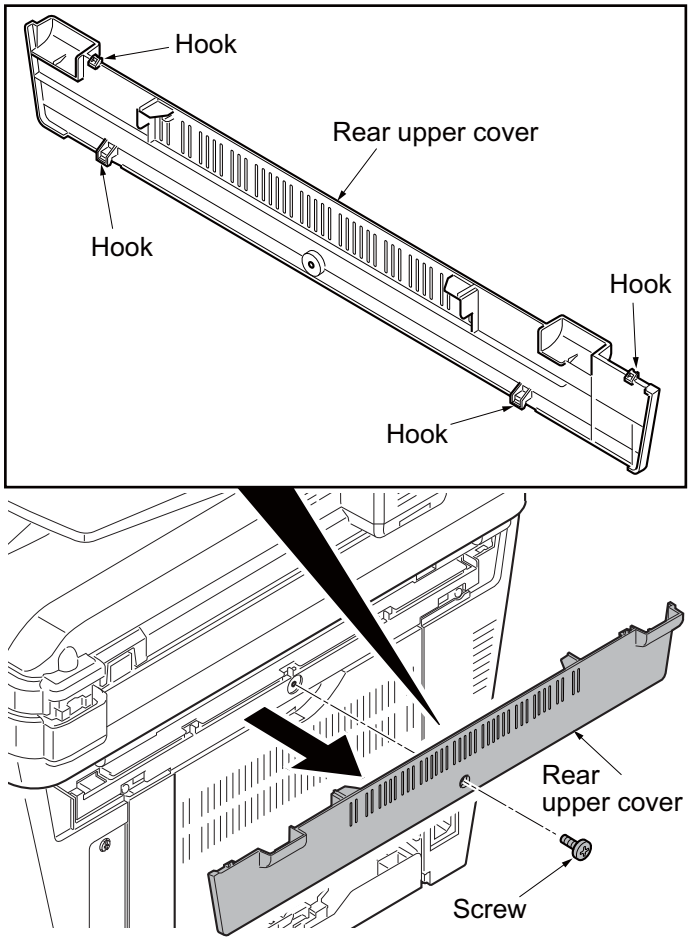

Figure 1-5-3

3. Remove the cassette (See page 1-5-6).
4. Open the front cover.
5. Unhook the hook and then remove the controller box cover.

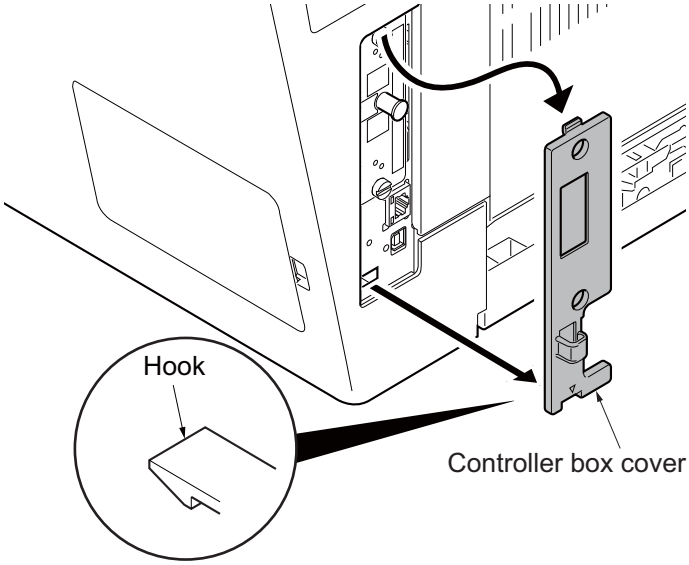

Figure 1-5-4

6. Unhook seven hooks and then remove the right cover.

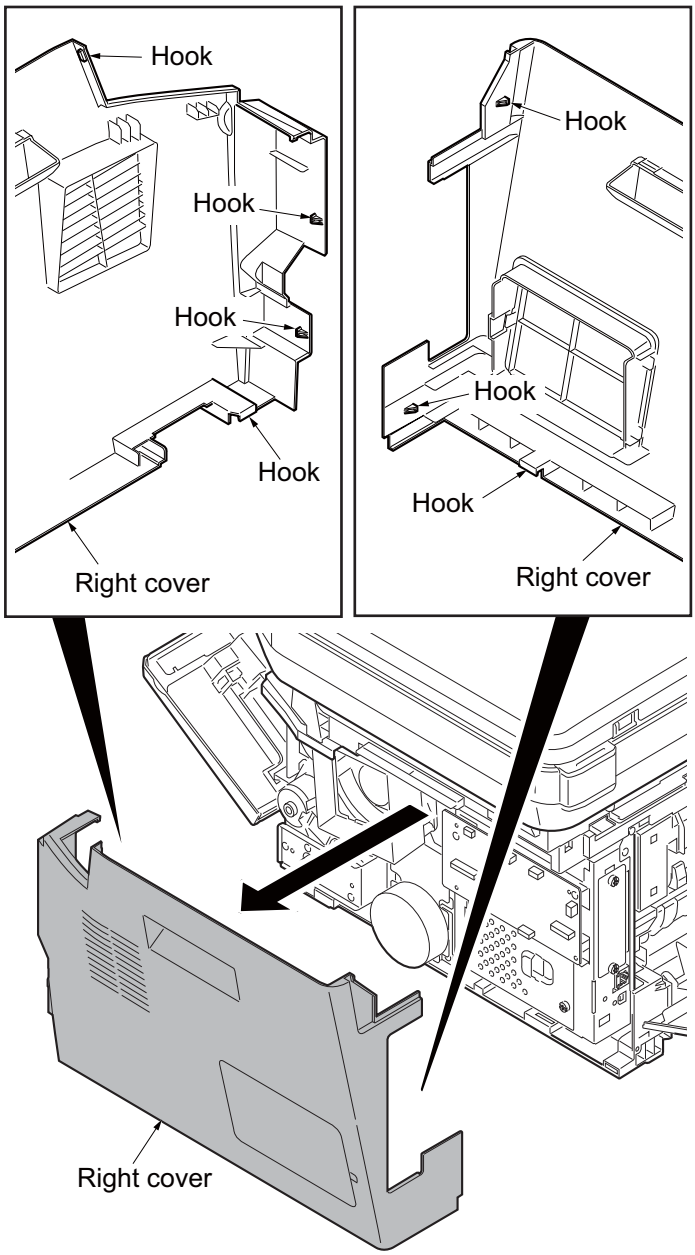

Figure 1-5-5

7. Unhook six hooks and then remove the left cover.

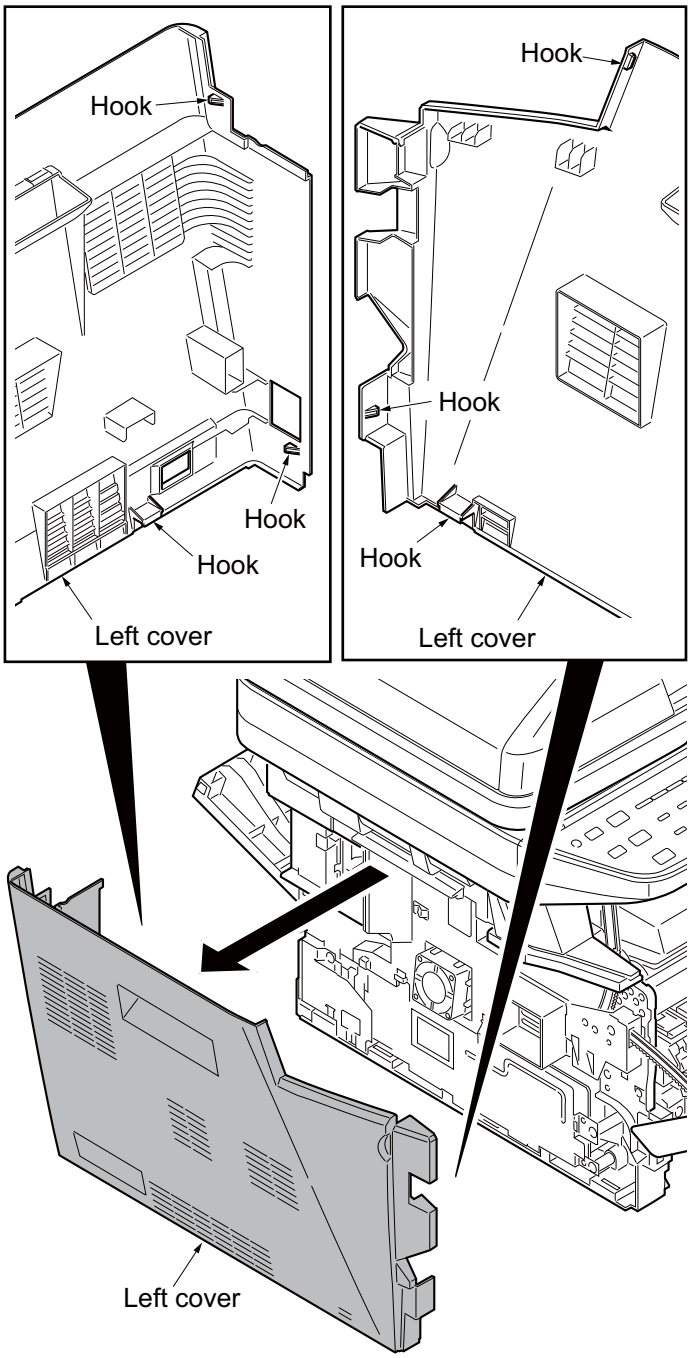

Figure 1-5-6

1-5-3 Paper feed section

(1) Detaching and refitting the paper feed assembly (paper feed roller and pickup roller)

Procedure

1. Remove the cassette.

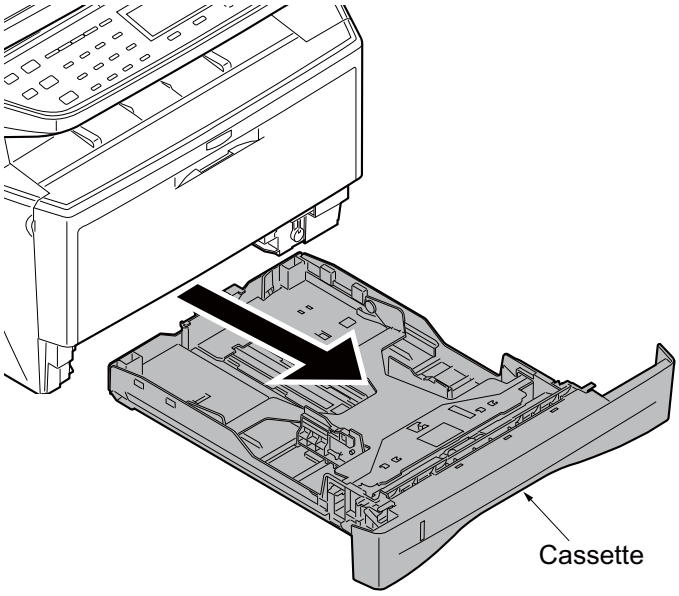

Figure 1-5-7

2. Slide the feed shaft.
3. While pressing the lever and then remove the paper feed roller assembly.

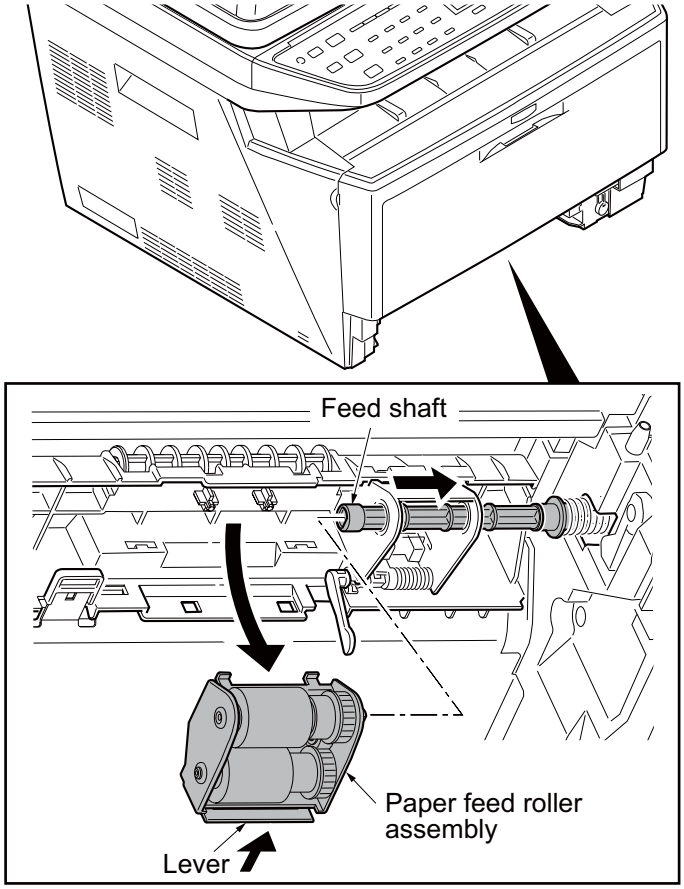

Figure 1-5-8

4. Check or replace the paper feed assembly and refit all the removed parts.

   When refitting the paper feed roller assembly, be sure to align the paper feed roller pivot with the slotted hole on the feed shaft.

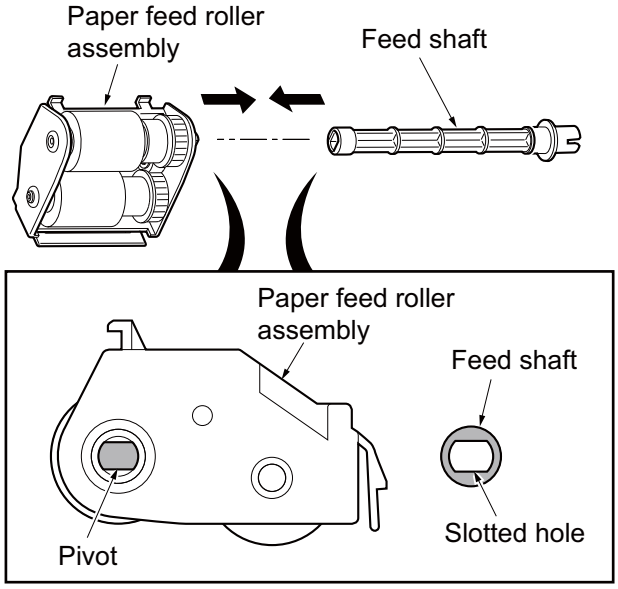

Figure 1-5-9

(2) Detaching and refitting the retard roller assembly

Procedure

1. Remove the cassette (See page 1-5-6).
2. Push the bottom plate down until it locks.
3. Unhook two hooks and then remove the retard guide.

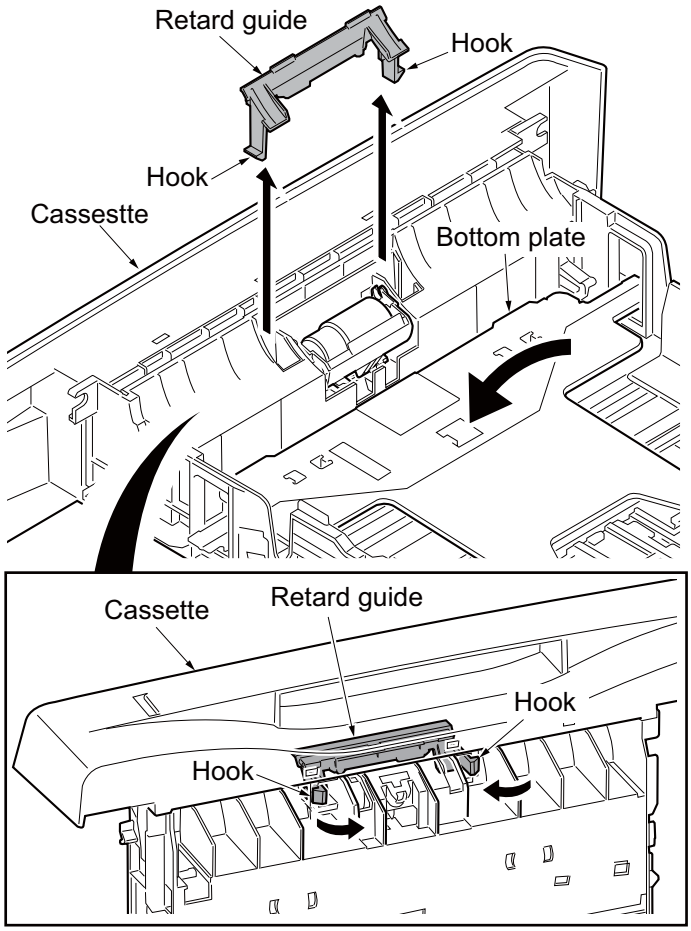

Figure 1-5-10

4. Remove the retard roller assembly.

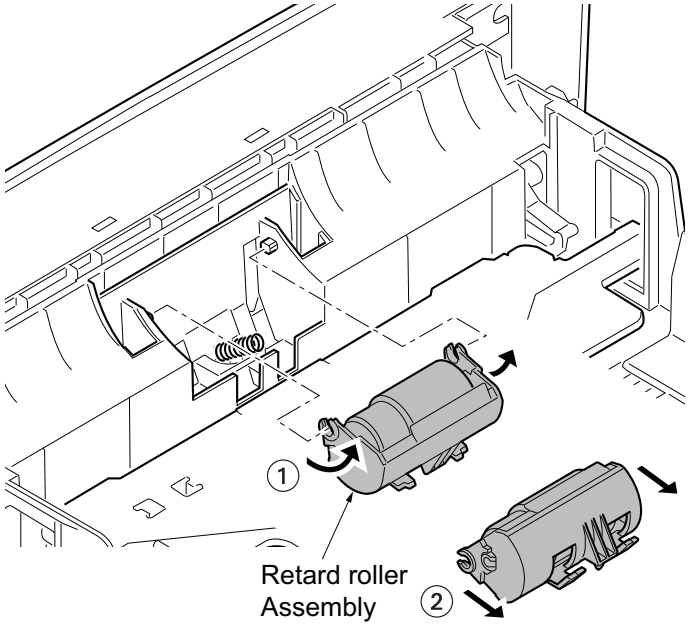

Figure 1-5-11

5. Check or replace the retard roller assembly and refit all the removed parts.

   Caution: Before refitting the retard roller assembly, firmly install the spring onto the projection of the retard roller assembly.

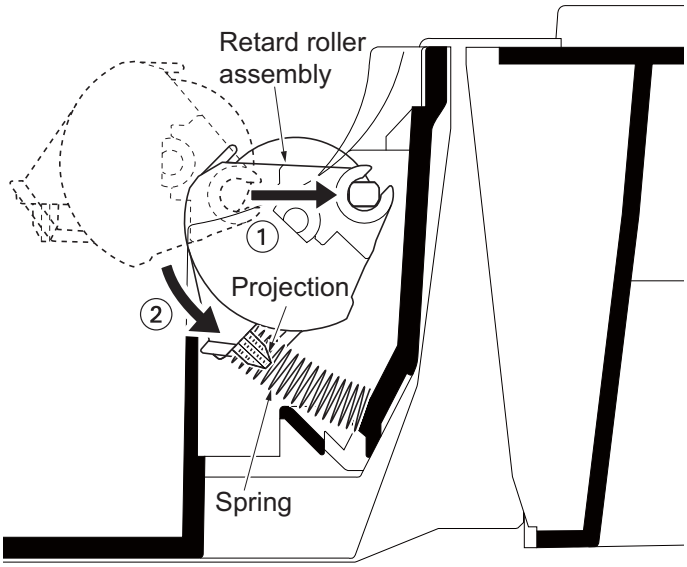

Figure 1-5-12

(3) Detaching and refitting the MP paper feed roller

Procedure

1. Open the front cover.
2. Pull the MP feed holder (lever) down. :1
3. Slide the MP feed holder. :2
4. Remove the MP paper feed roller. :3

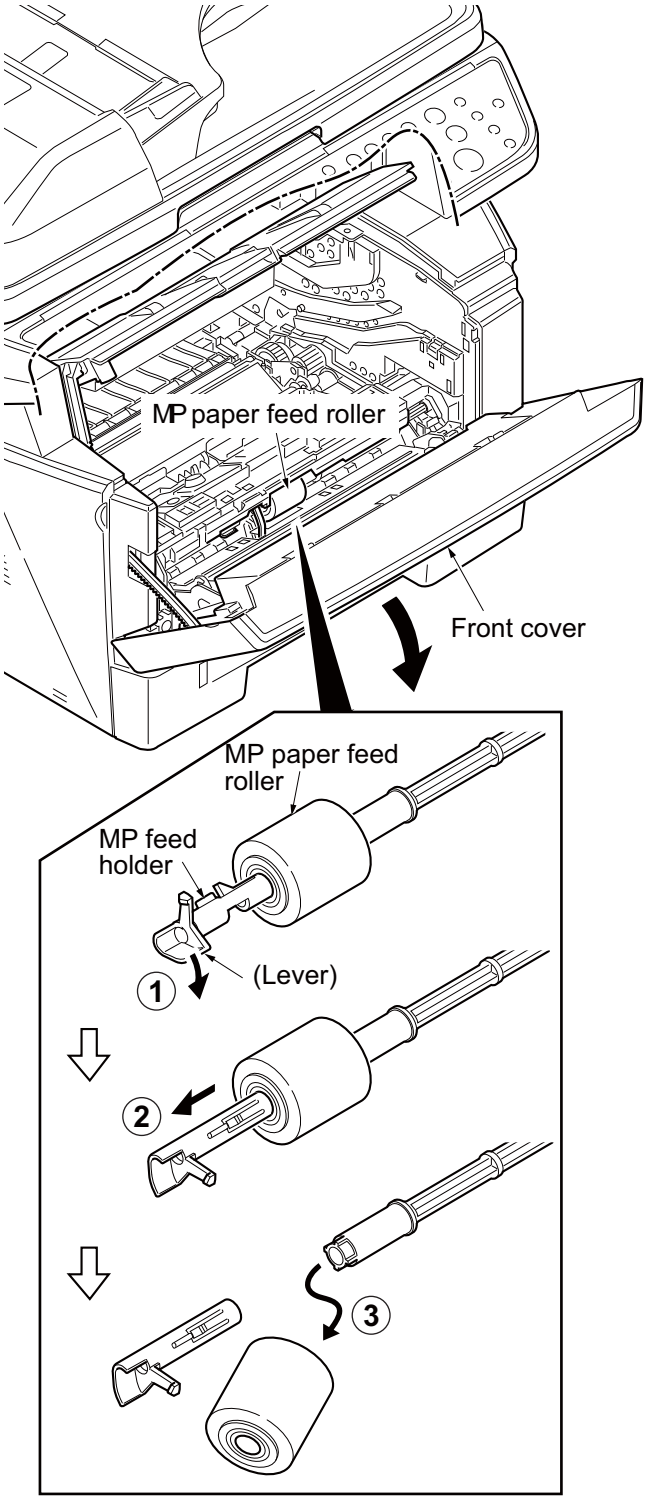

Figure 1-5-13

5. Check or replace the MP paper feed roller and refit all the removed parts.

   When refitting the MP paper feed roller, be sure to align the paper feed roller pivot with the slotted hole on the MPF feed shaft.
   When refitting the MP paper feed roller, be sure to align the MPF feed shaft pivot with the slotted hole on the MP paper feed roller.

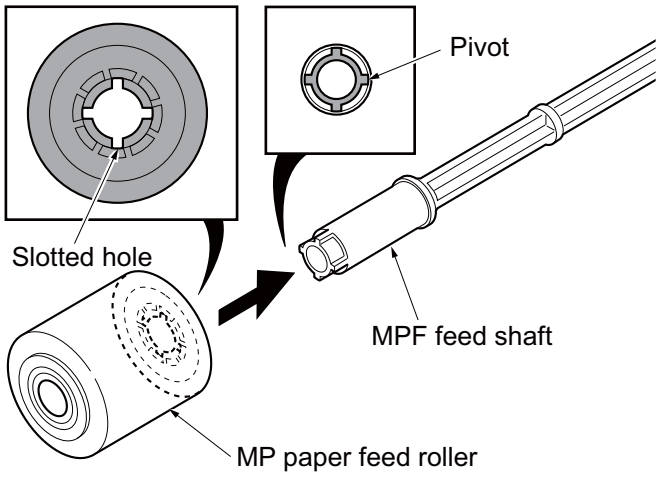

Figure 1-5-14

(4) Note on removing and Installing the upper registration roller and lower registration roller

When reinstalling the upper registration roller or lower registration roller, be sure to use a new registration L spring and registration R spring. Otherwise, paper feeding may be deteriorated due to the spring hooks possibly being distorted during the spring is unhooked.

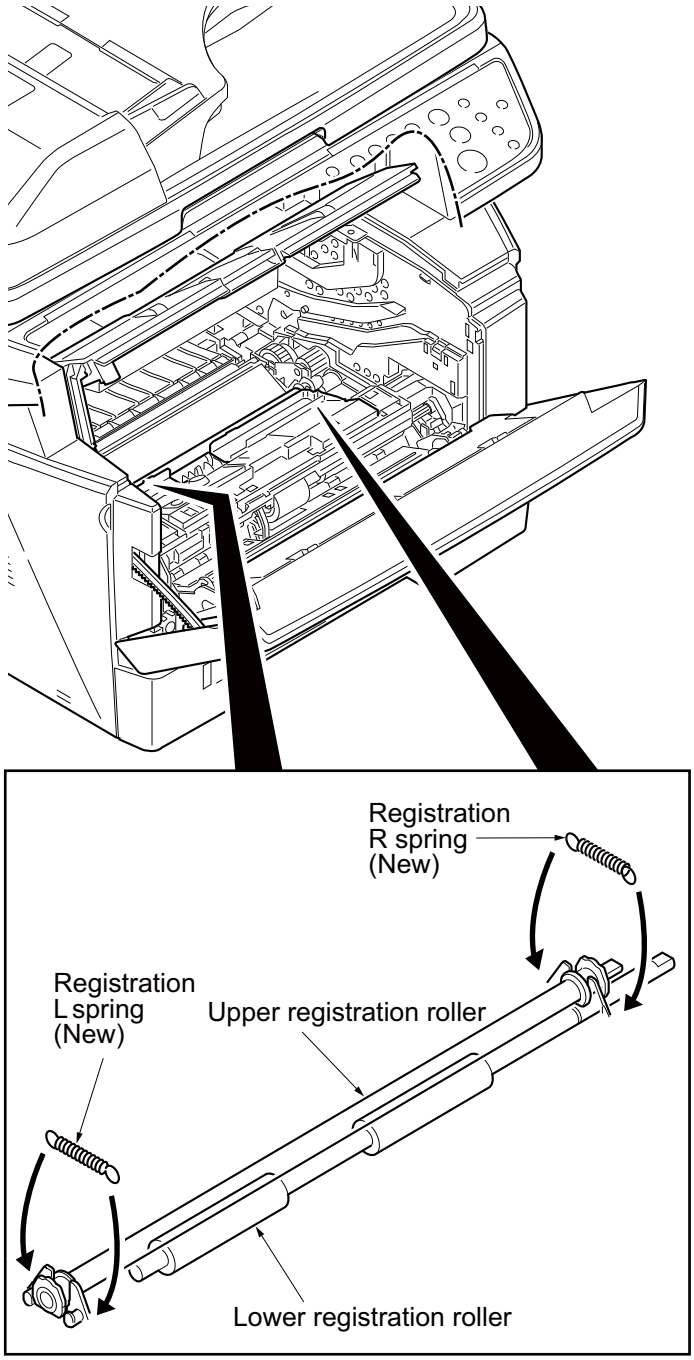

Figure 1-5-15

1-5-4 Optical section

(1) Detaching and refitting the DP

Procedure

1. Pull the DP out.

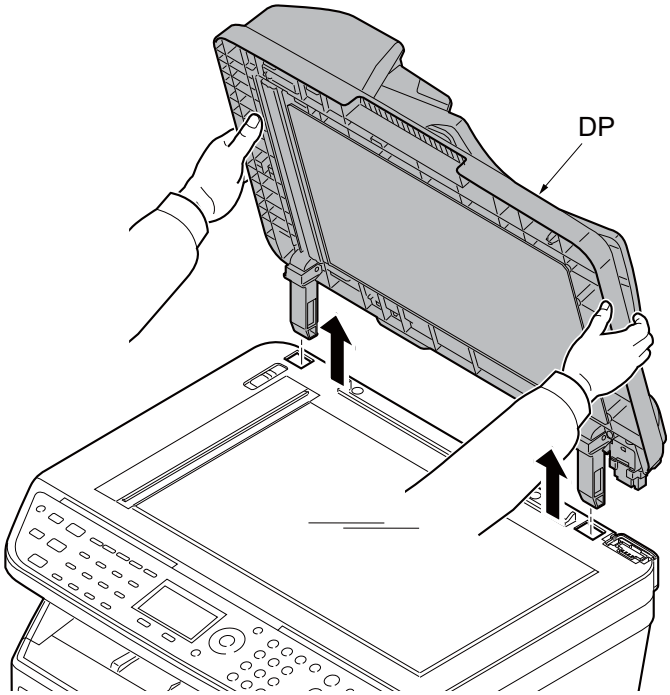

Figure 1-5-16

(2) Detaching and refitting the scanner unit

Procedure

1. Remove the DP (See page 1-5-13).
2. Remove the left cover and right cover (See page 1-5-3).
3. Remove the FFC and connector from the control PWB.
4. Remove three connectors from the scanner PWB.

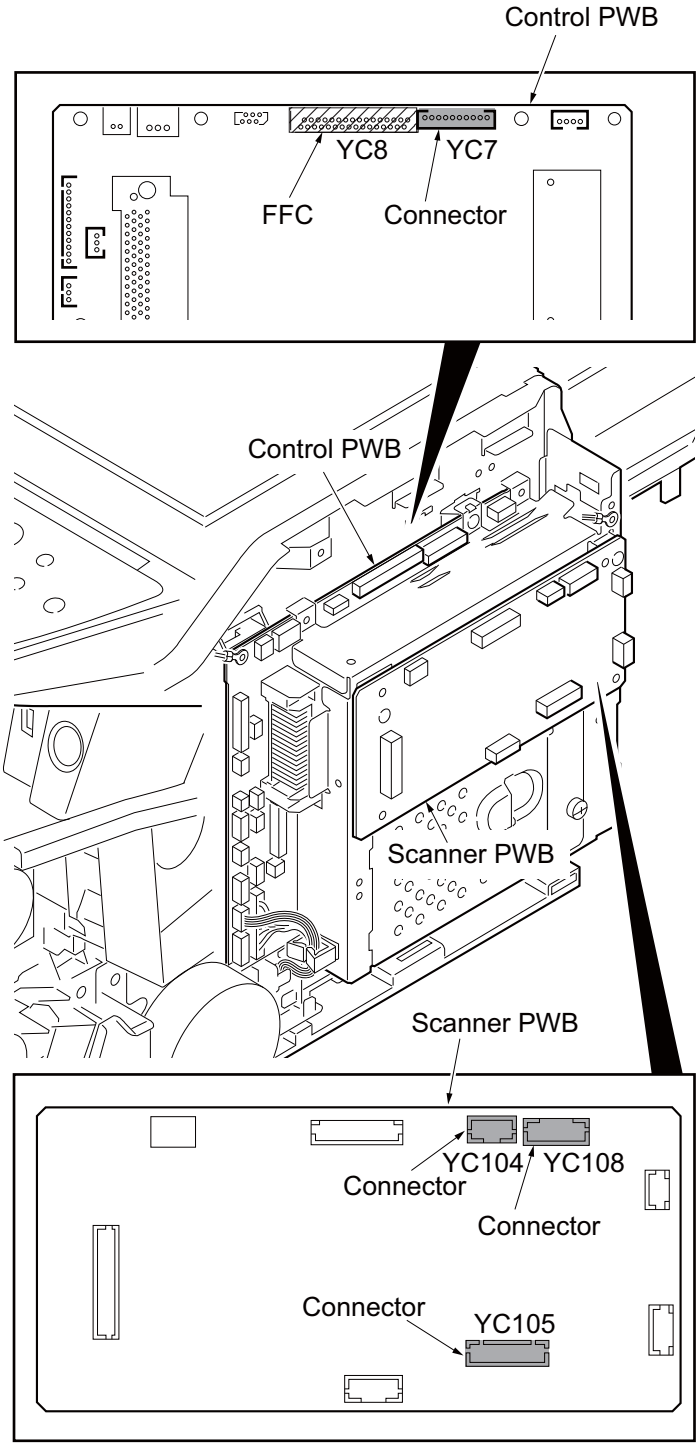

Figure 1-5-17

5. Release three clamps and then remove the wires.

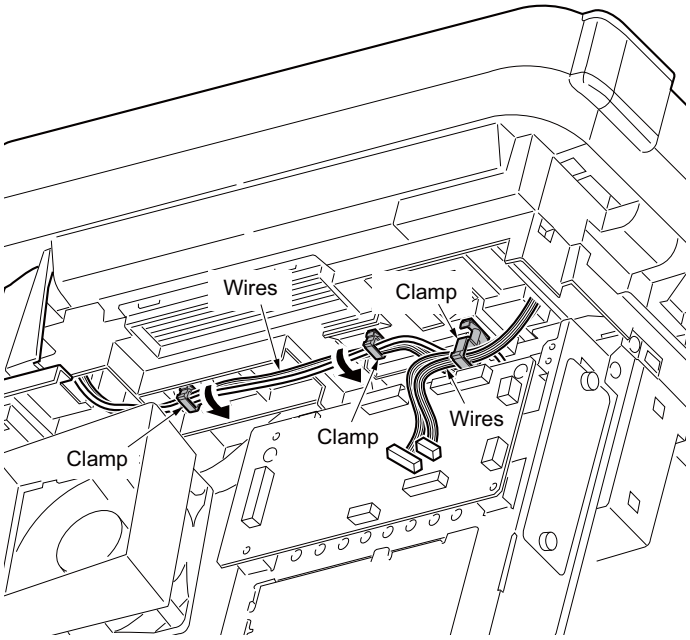

Figure 1-5-18

6. Remove two screws.

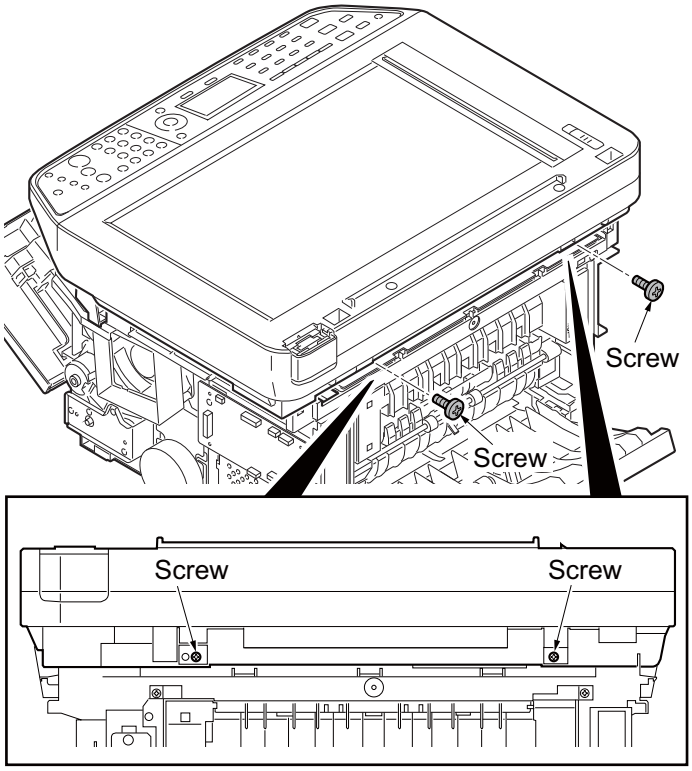

Figure 1-5-19

7. Unhook four hooks and then remove the scanner unit.

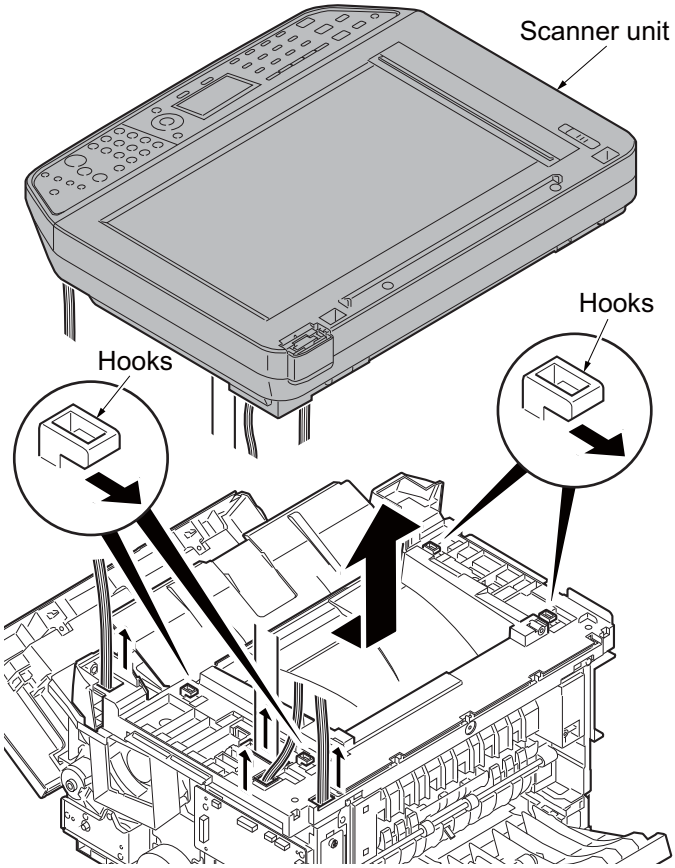

Figure 1-5-20

(3) Detaching and refitting the laser scanner unit (LSU)

Procedure

1. Remove the scanner unit (See page 1-5-14).
2. Remove the screw and then remove the grounding terminal.
3. Remove three connectors from the control PWB.

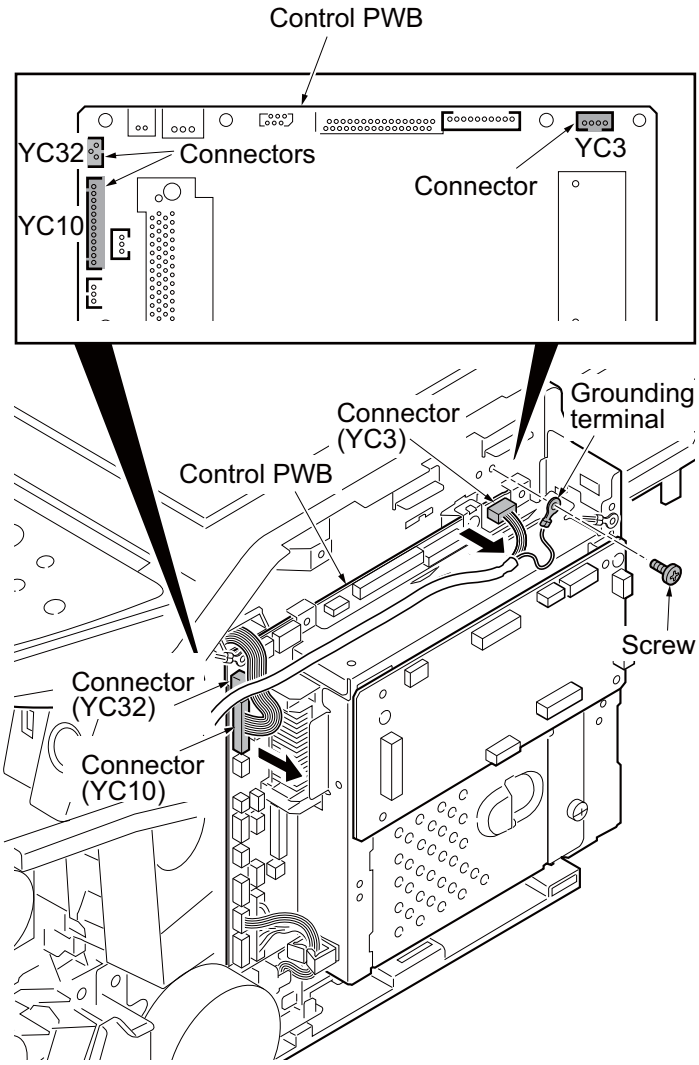

Figure 1-5-21

4. Remove the wires from three clamps.
5. Remove the connector from the power source PWB.

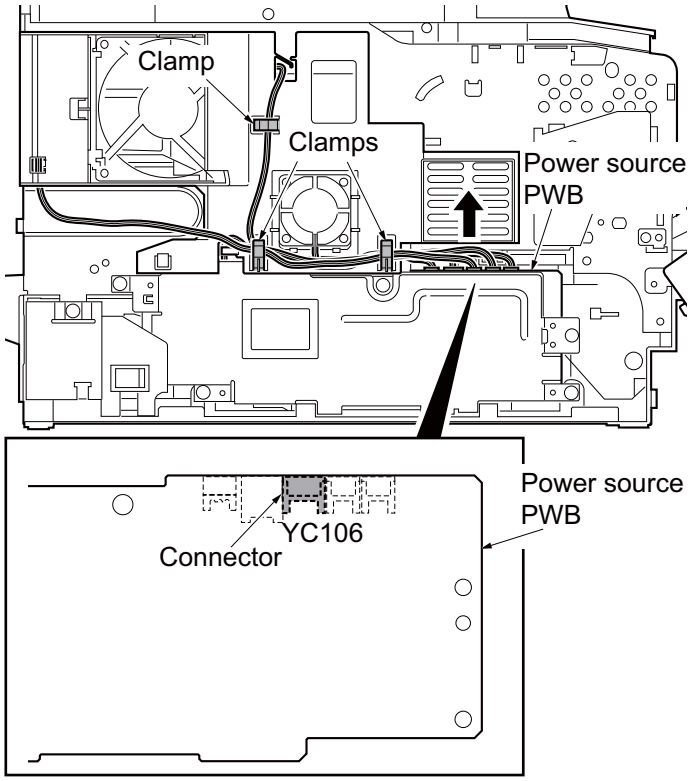

Figure 1-5-22

6. Unhook four hooks and then remove the frame left duct.
7. Remove the wires from the clamp.

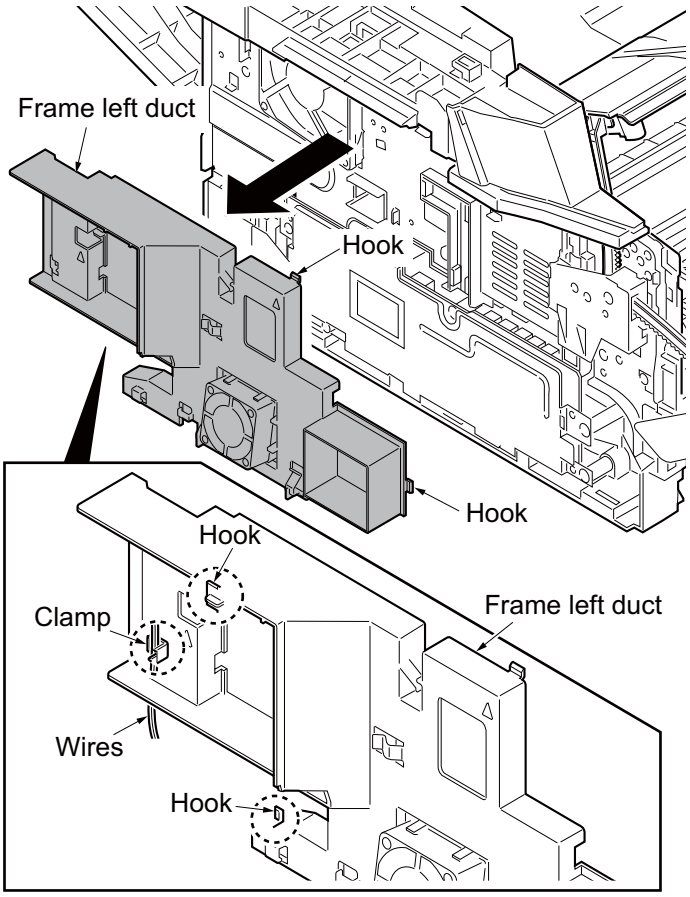

Figure 1-5-23

8. Release the hook and then remove the top cover rack-L from the top cover.

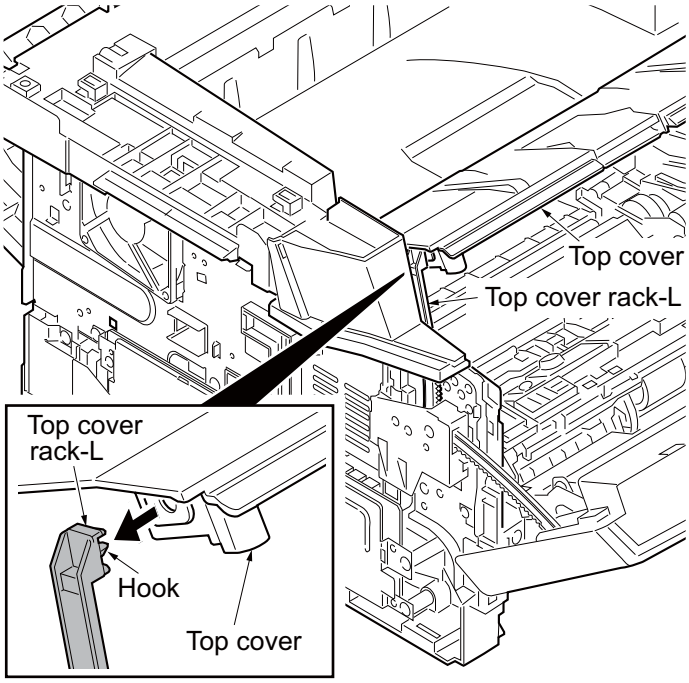

Figure 1-5-24

9. Remove four screws from the top cover.

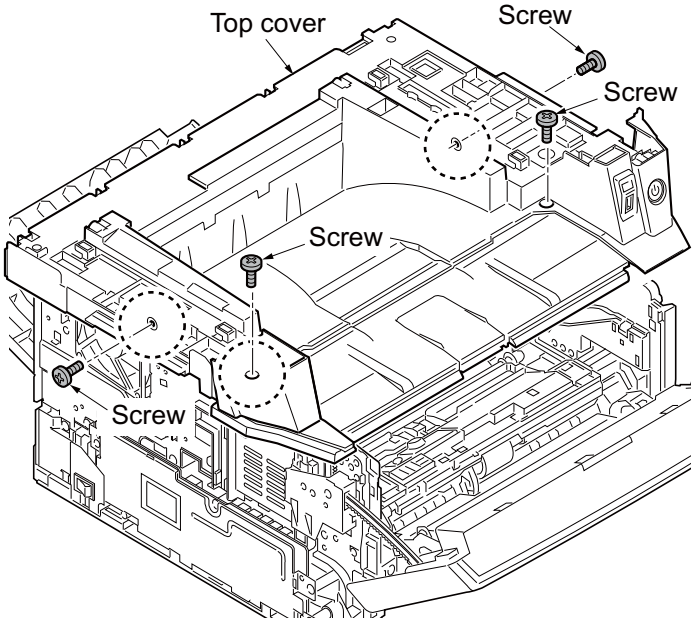

Figure 1-5-25

10. Unhook two hooks and then remove the top cover.

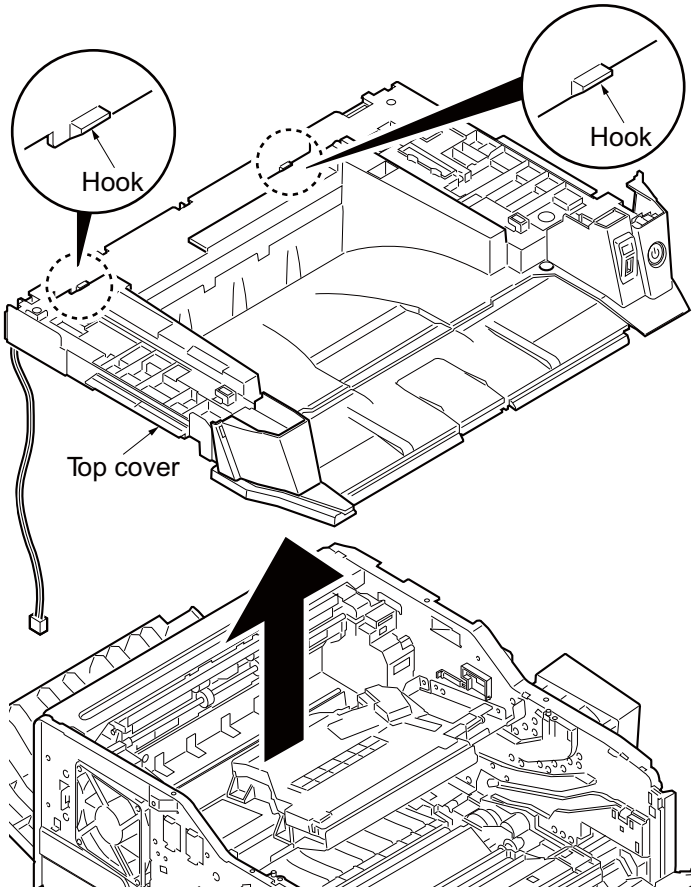

Figure 1-5-26

11. Release the clamp and then pull out the wires.
12. Remove four screws and then remove the laser scanner unit (LSU).
13. Check or replace the laser scanner unit (LSU) and refit all the removed parts.

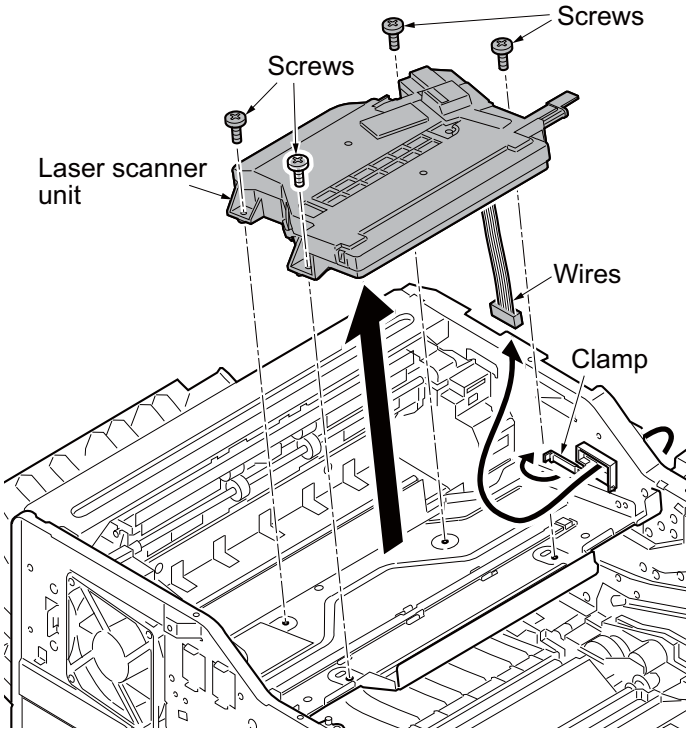

Figure 1-5-27

(4) Replacing the image scanner unit (ISU)

Procedure

Removing the image scanner unit (ISU)

1. Remove the DP (See page 1-5-13).
2. Unhook two hooks by using a flat screwdriver from the pits.
3. Remove the connector and then remove the operation panel.

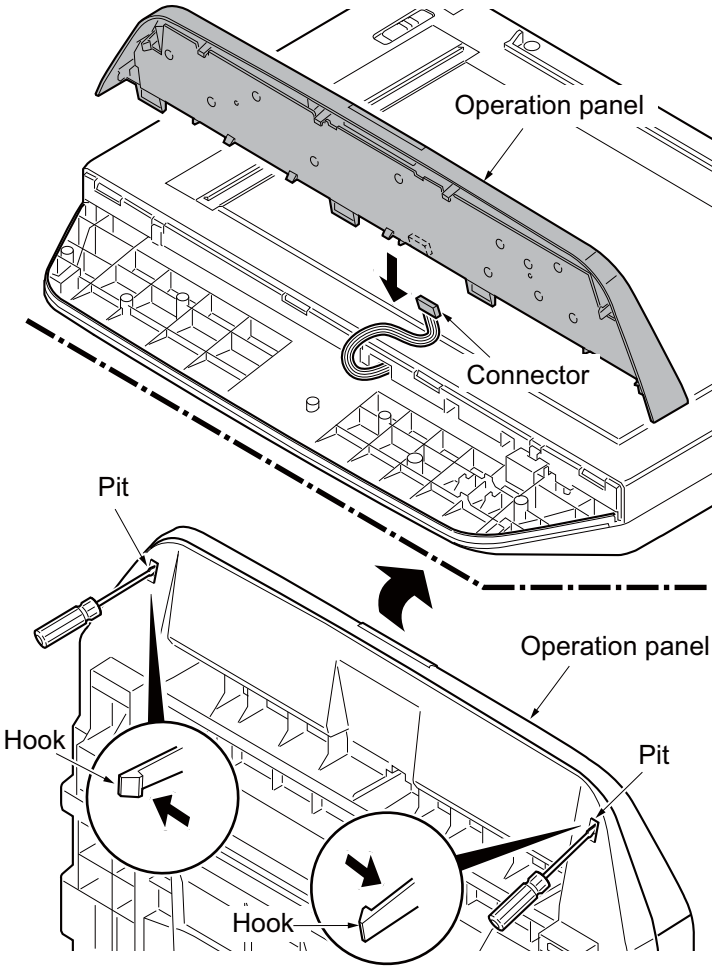

Figure 1-5-28

4. Remove two screws.
5. Unhook three hooks and then remove the ISU upper frame.

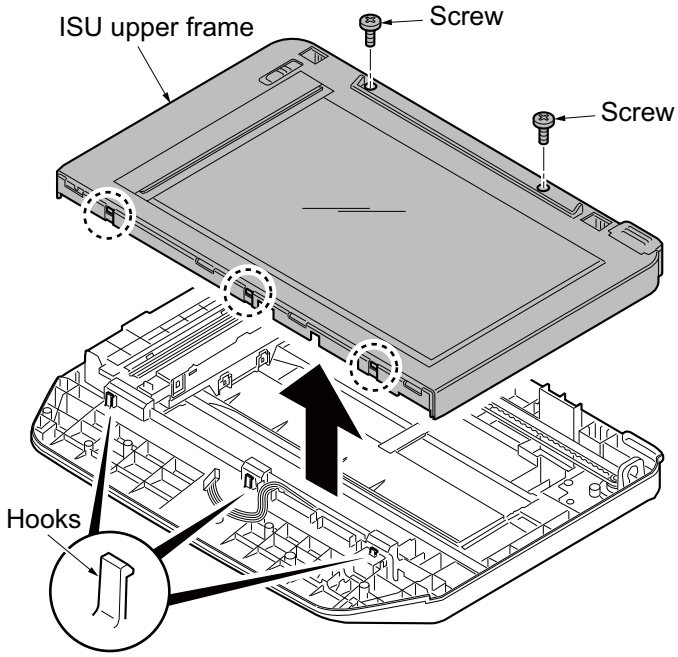

Figure 1-5-29

6. Move the image scanner unit (ISU) in the middle of the ISU shaft.
7. Detach the ISU shaft from the holder by lifting it.
8. Pull the ISU shaft out from the ISU.

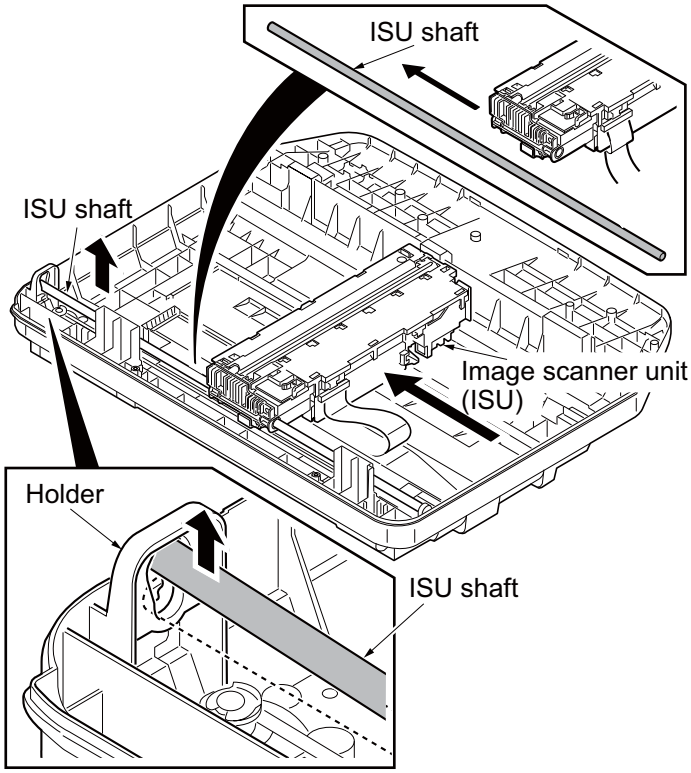

Figure 1-5-30

9. Remove the ISU belt from the tension pulley and ISU gear 63/32.
10. Remove the ISU belt from the hooks of the ISU.

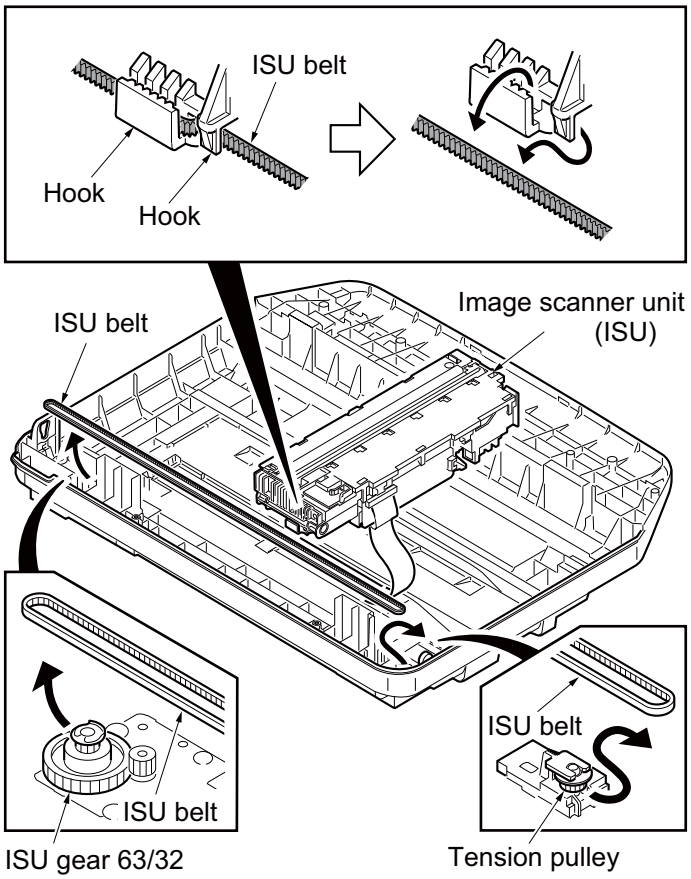

Figure 1-5-31

11. Remove the FFC center stopper.

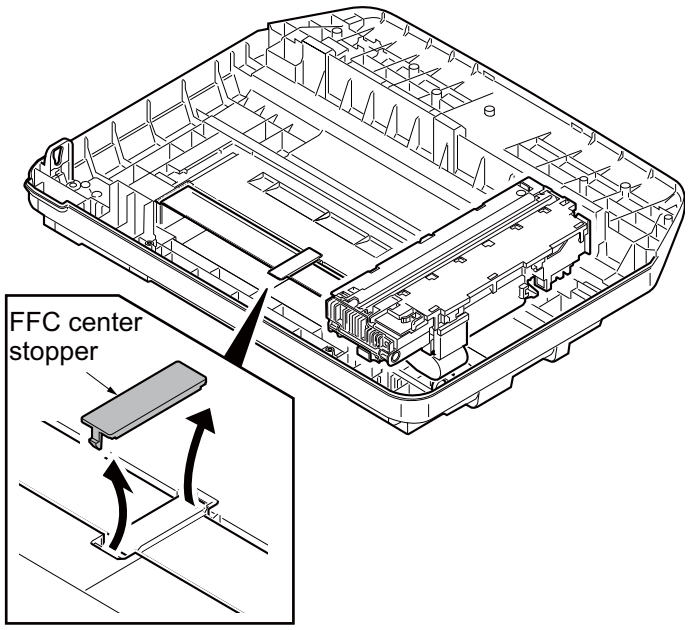

Figure 1-5-32

12. Remove the FFC from the FFC tape D.
13. Remove the ferrite core from the pit.
14. Remove the FFC from the FFC tape A.

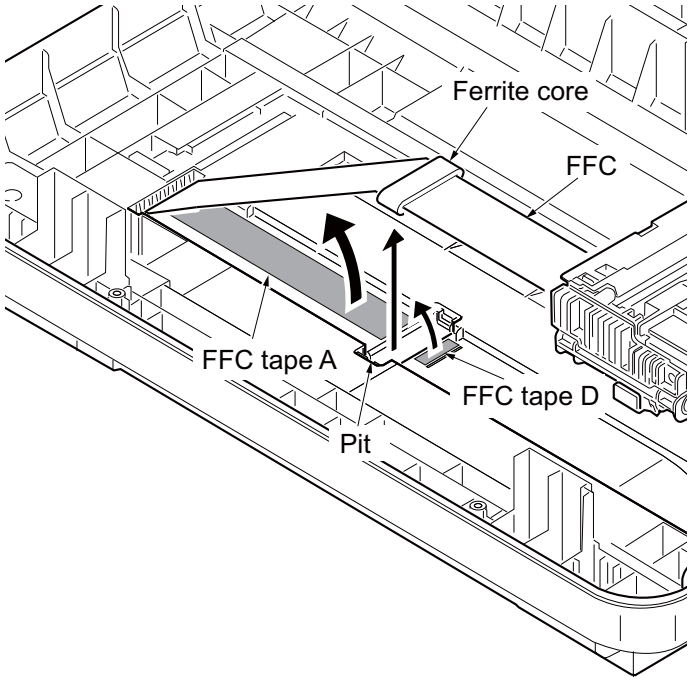

Figure 1-5-33

15. Fold the end of the FFC and then pull the FFC out from the ISU lower frame.
16. Remove the FFC tape D and A from the ISU lower frame.
17. Clean the adhesive residue of the FFC tape D and A.

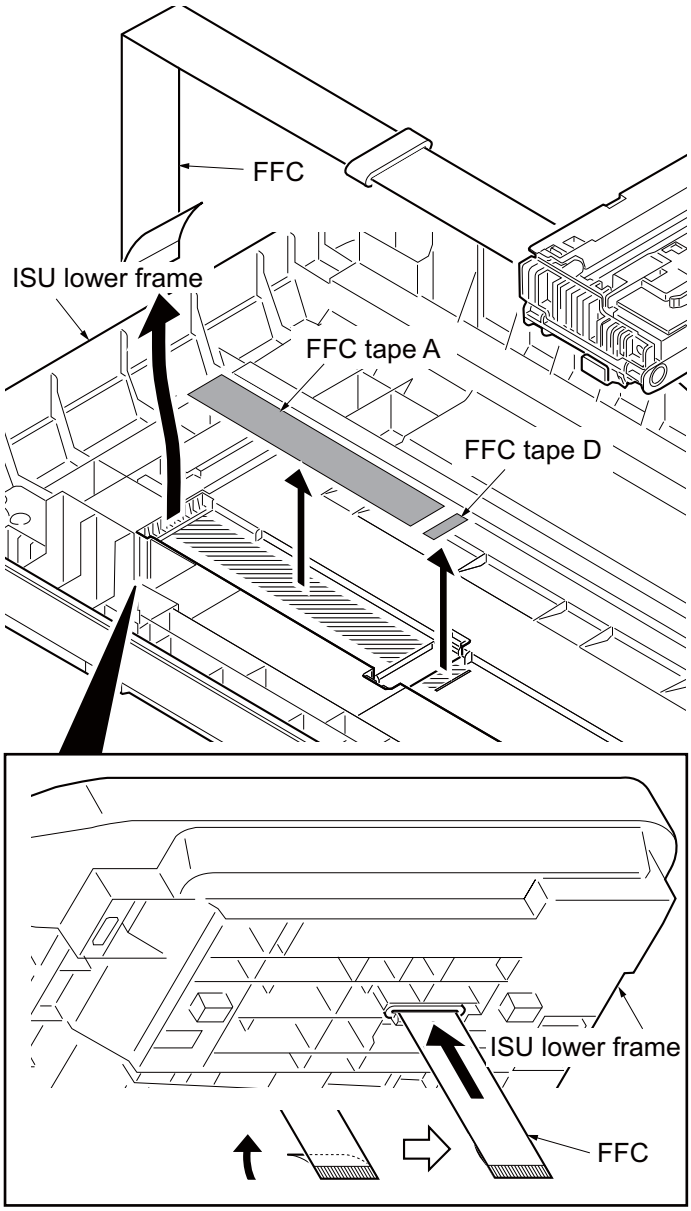

Figure 1-5-34

18. Remove the ferrite core from the FFC.

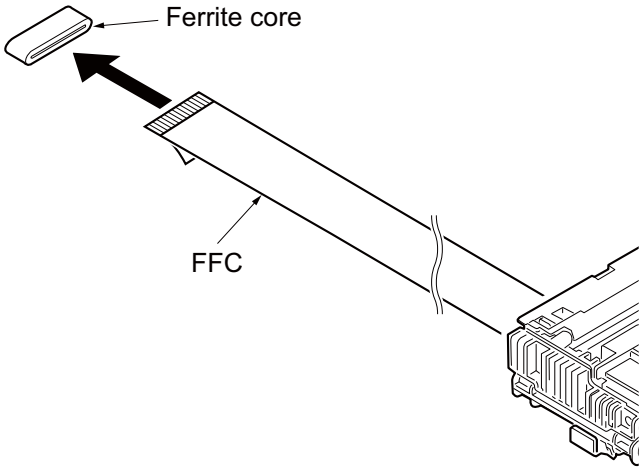

Figure 1-5-35

Installing the image scanner unit (ISU)

1. Peel off the protective seal on one side from the FFC tape D.
2. Stick the FFC tape D on the ISU lower frame, aligned with the marking of the frame.
   (Sticking standards: See right figure)
3. Peel off the protective seal on the other side of the FFC tape A.
4. Stick the FFC tape A on the ISU lower frame.
   (At the right for how to correctly sick the tape in position, see the figure.)

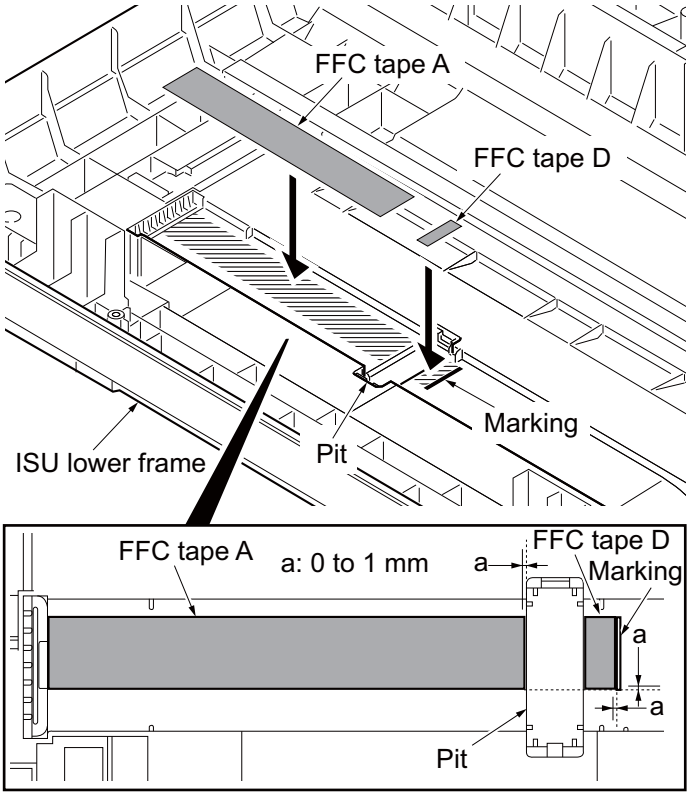

Figure 1-5-36

5. Fix the ferrite core onto the FFC.

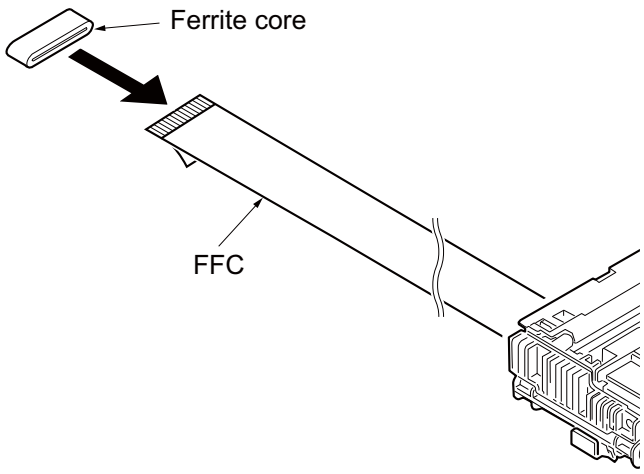

Figure 1-5-37

6. Peel off the protective seal from the FFC tape D.
7. Align the line marking on the FFC with the rib on the ISU lower frame, then fix the FFC to the FFC tape D.
8. Install the ferrite core in the pit.
9. Peel off the released paper from the FFC tape A.
10. Stick the FFC on the FFC tape A.

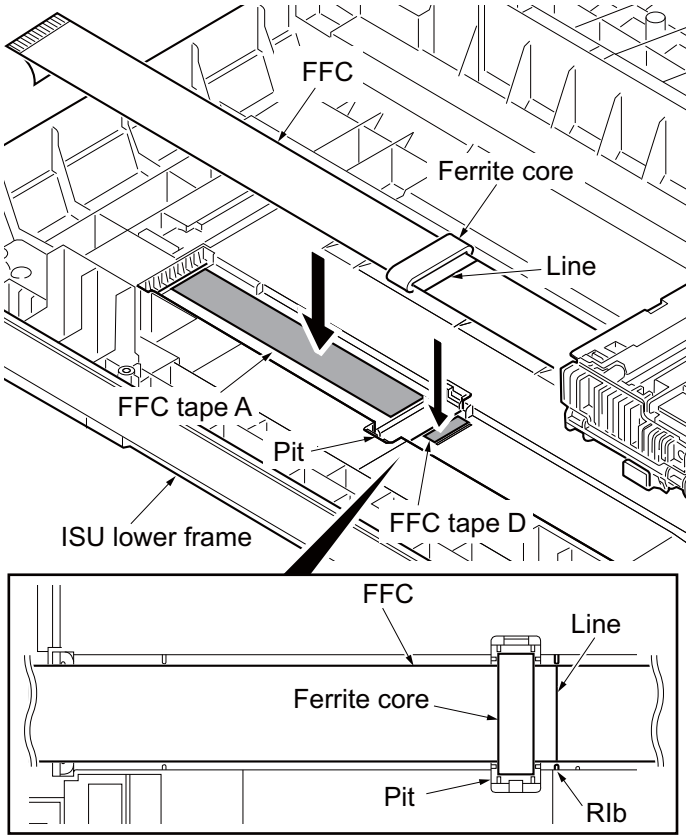

Figure 1-5-38

11. Thread an end of the FFC through the ISU lower frame.
12. Refer to the step 11 to 1 and refit all the removed parts.

NOTE:
When the replacing the image scanner unit (ISU), perform following maintenance modes.

1. U425 Setting the target (see page 1-3-20)
2. U411 Adjusting the scanner automatically (see page 1-3-18)

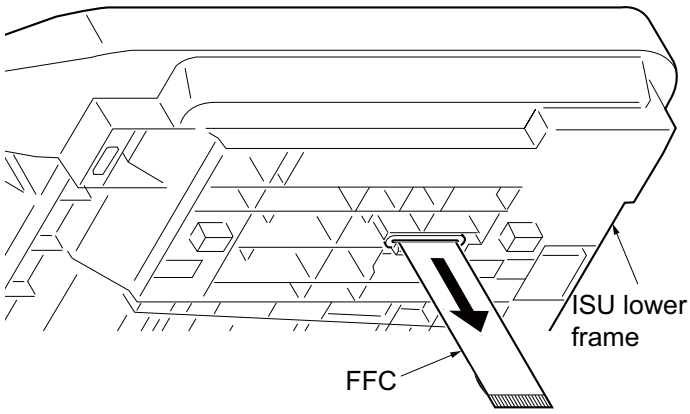

Figure 1-5-39

1-5-5 Developer section

(1) Detaching and refitting the developer unit

Procedure

1. Open the front cover.
2. Remove the developer unit.
3. Check or replace the developer unit and refit all the removed parts.

NOTE:
When the periodic maintenance (replacing the maintenance kit, see page 2-4-4), perform following maintenance modes.

1. U251 Clearing the maintenance count (see page 1-3-14)

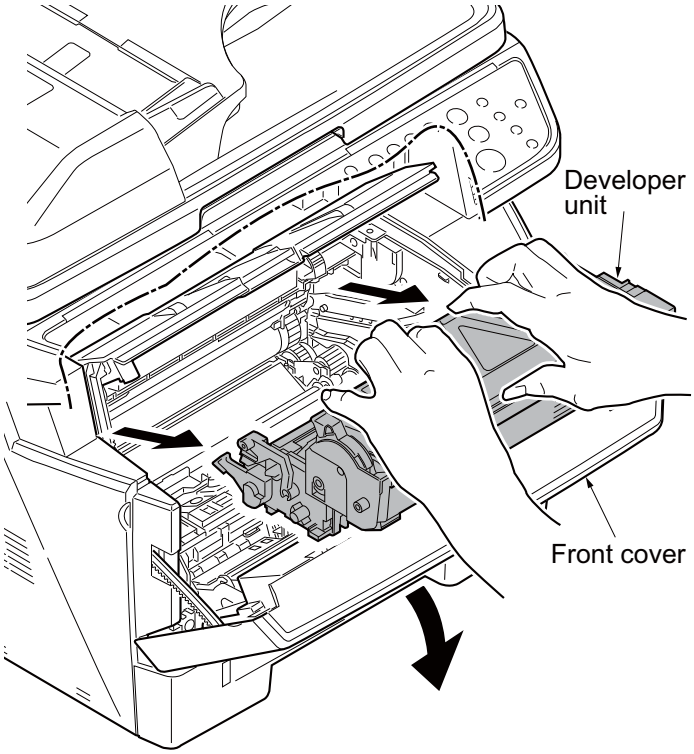

Figure 1-5-40

1-5-6 Drum section

(1) Detaching and refitting the drum unit

Procedure

1. Remove the developer unit (See page 1-5-27).
2. Remove the drum unit.
3. Check or replace the drum unit and refit all the removed parts.

NOTE:
When the periodic maintenance (replacing the maintenance kit, see page 2-4-4), perform following maintenance modes.

1. U251 Clearing the maintenance count (see page 1-3-14)

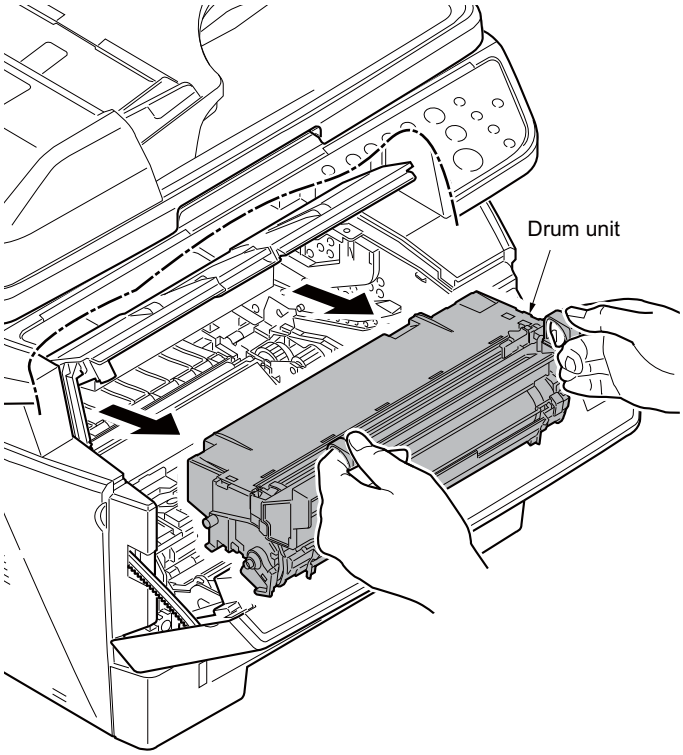

Figure 1-5-41

(2) Detaching and refitting the main charger unit

Procedure

1. Remove the developer unit (See page 1-5-27).
2. Remove the drum unit (See page 1-5-28).
3. Remove the tape.
4. While pushing on the main plate 1, slide the main charger unit 2.

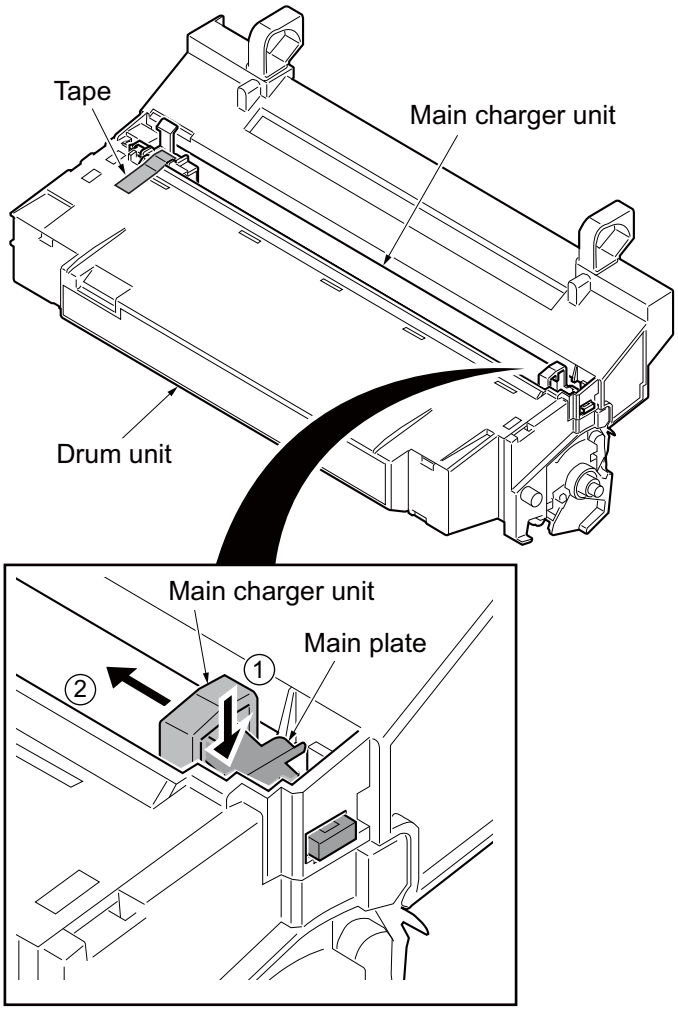

Figure 1-5-42

5. Remove the main charger unit by lifting it.
6. Check or replace the main charger unit and refit all the removed parts.

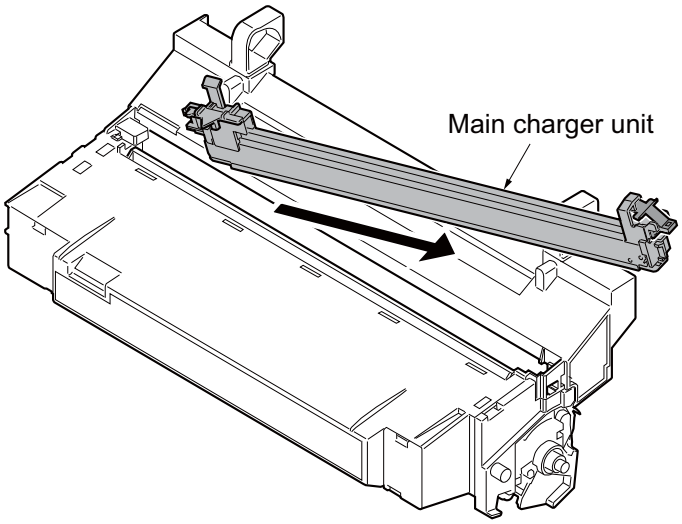

Figure 1-5-43

1-5-7 Transfer/separation section

(1) Detaching and refitting the transfer roller

Procedure

1. Remove the developer unit (See page 1-5-27).
2. Remove the drum unit (See page 1-5-28).
3. Slide the paper chute guide and unhook the hooks.
4. Remove the paper chute guide.

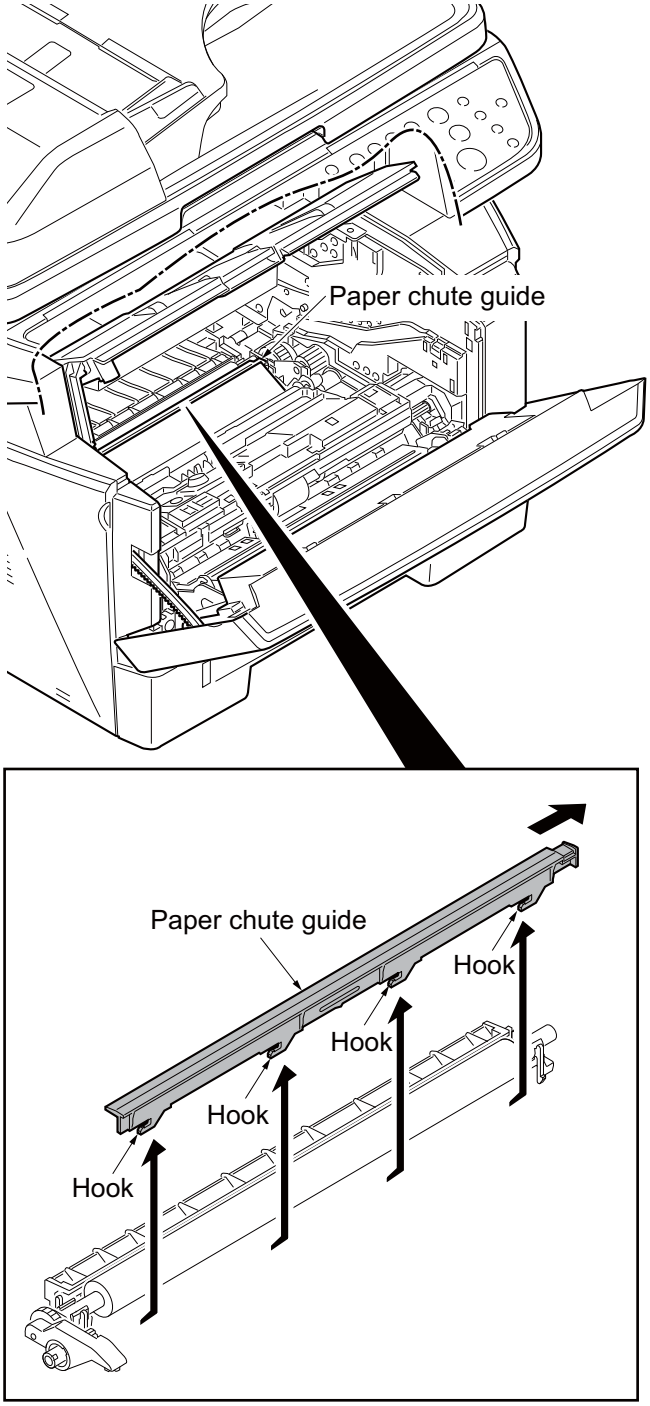

Figure 1-5-44

5. Remove the transfer roller's shaft from the both transfer bushes.
6. Remove the gear Z16 from the transfer roller.

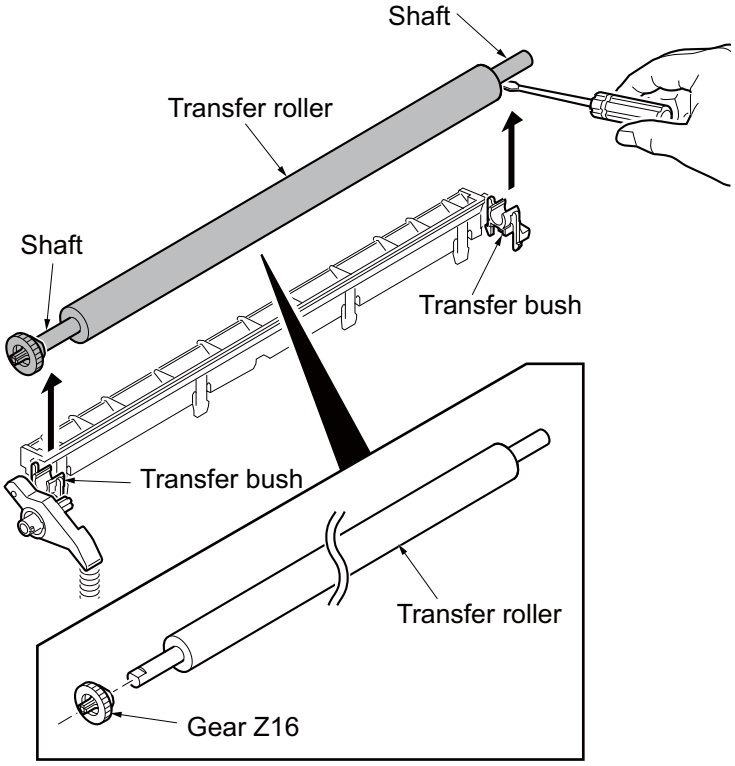

Figure 1-5-45

7. Check or replace the transfer roller and refit all the removed parts.

   Caution: When refitting the transfer roller, be careful about following point. Push the release lever to raise the lever end, then insert the front of gear Z16 under the release lever end.

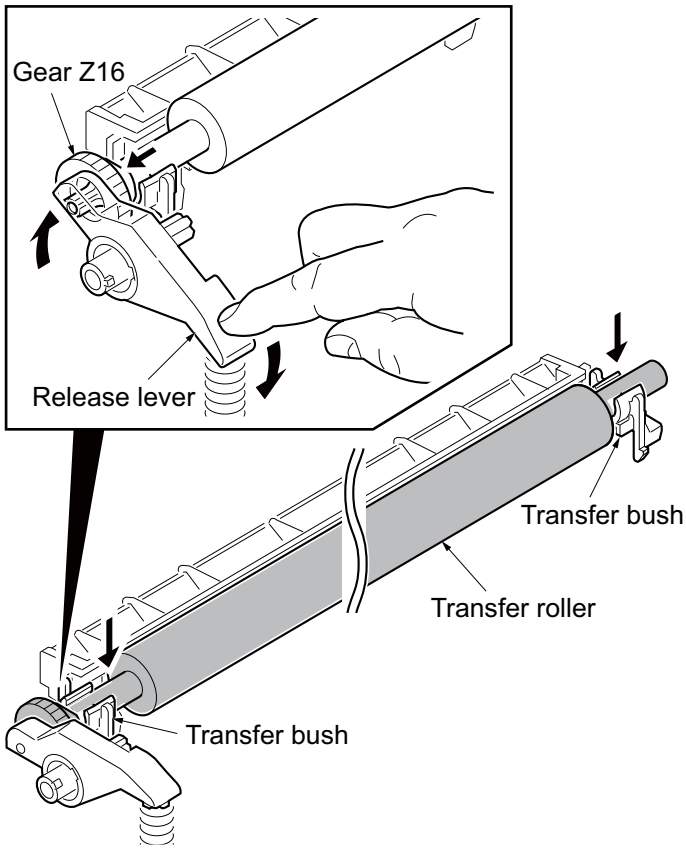

Figure 1-5-46

1-5-8 Fuser section

(1) Detaching and refitting the fuser unit

Procedure

1. Remove the left cover and right cover (See page 1-5-3).
2. Remove the wires from three clamps.
3. Remove the connector from the power source PWB.

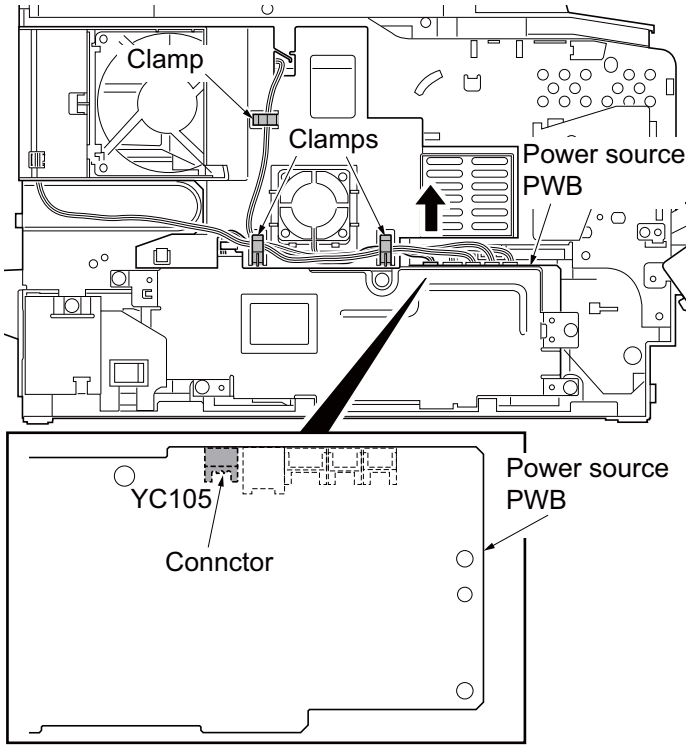

Figure 1-5-47

4. Unhook four hooks and then remove the frame left duct.
5. Remove the wires from the clamp.

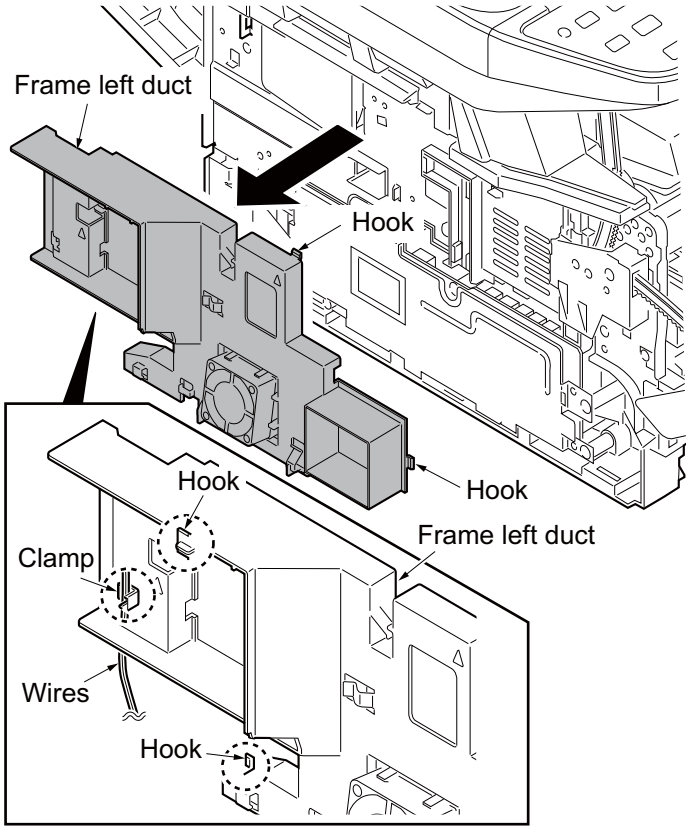

Figure 1-5-48

6. Remove the connector from the power source PWB.

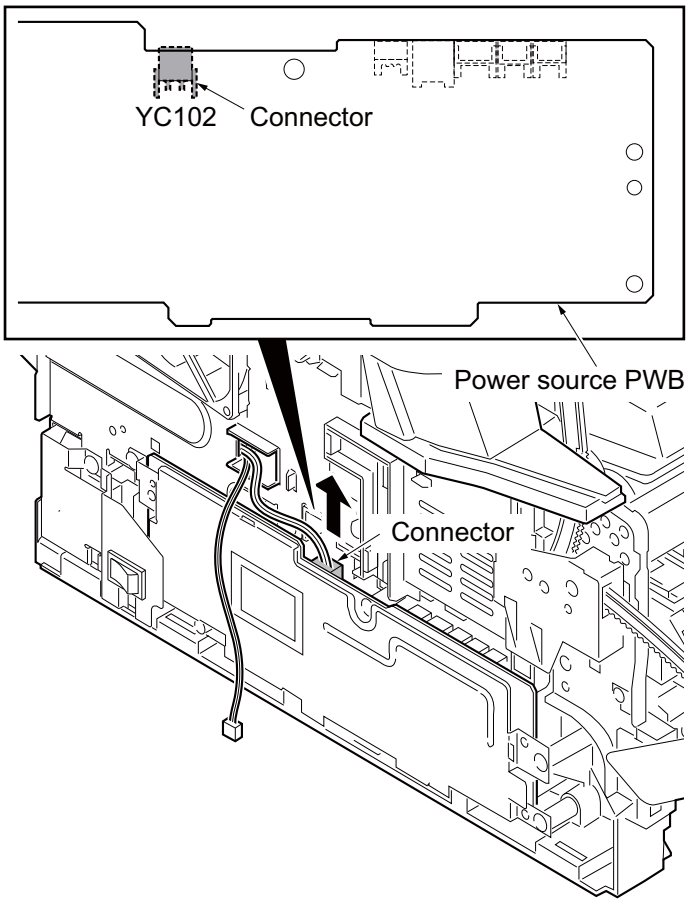

Figure 1-5-49

7. Remove the connector from the control PWB.

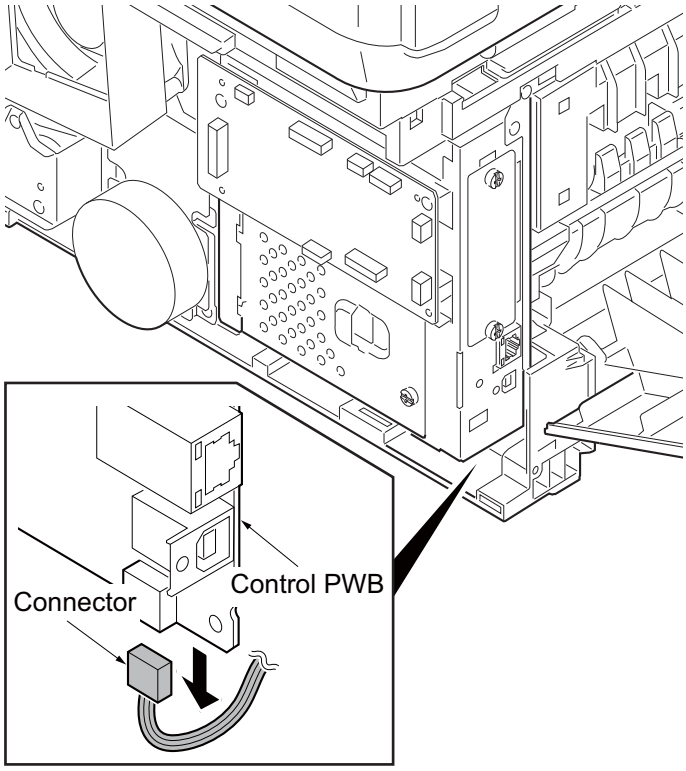

Figure 1-5-50

8. Remove the rear cover.

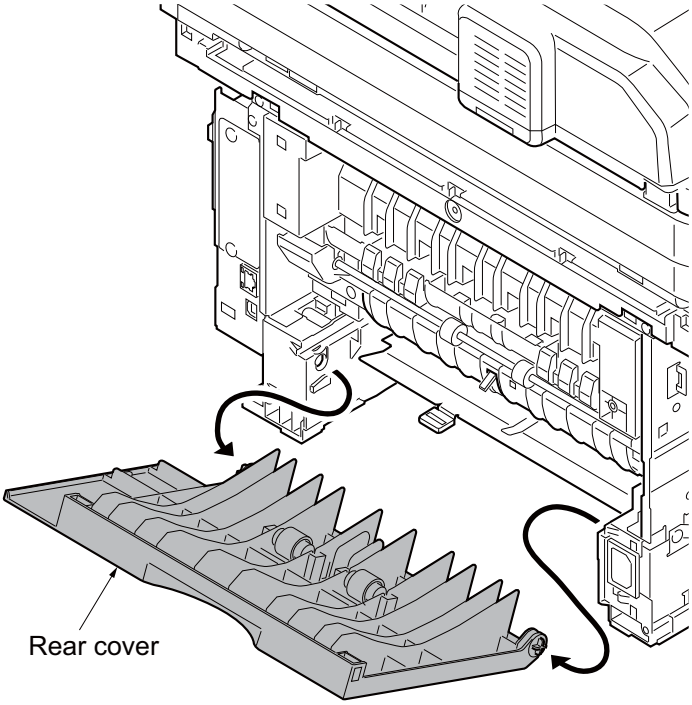

Figure 1-5-51

9. Remove two screws and then remove the fuser unit.

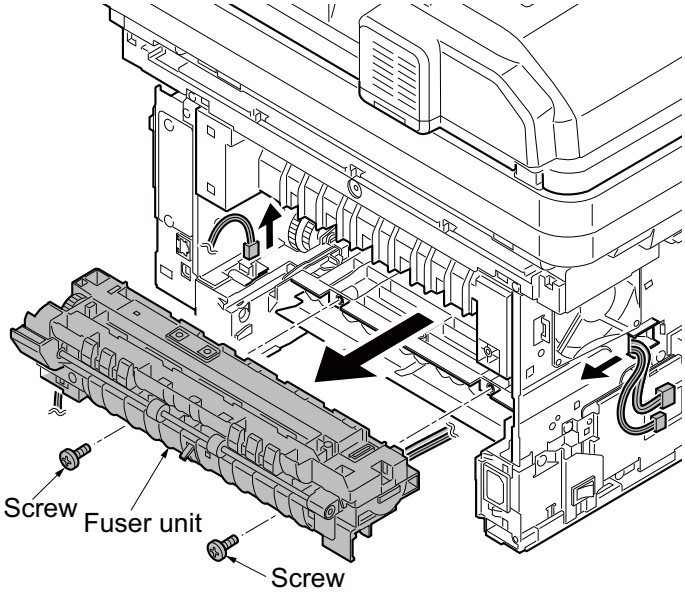

Figure 1-5-52

10. Check or replace the fuser unit and refit all the removed parts.

    Caution: When reinstalling the fuser unit, tighten up a screw while pressing the fuser unit in order of 1 to 2.

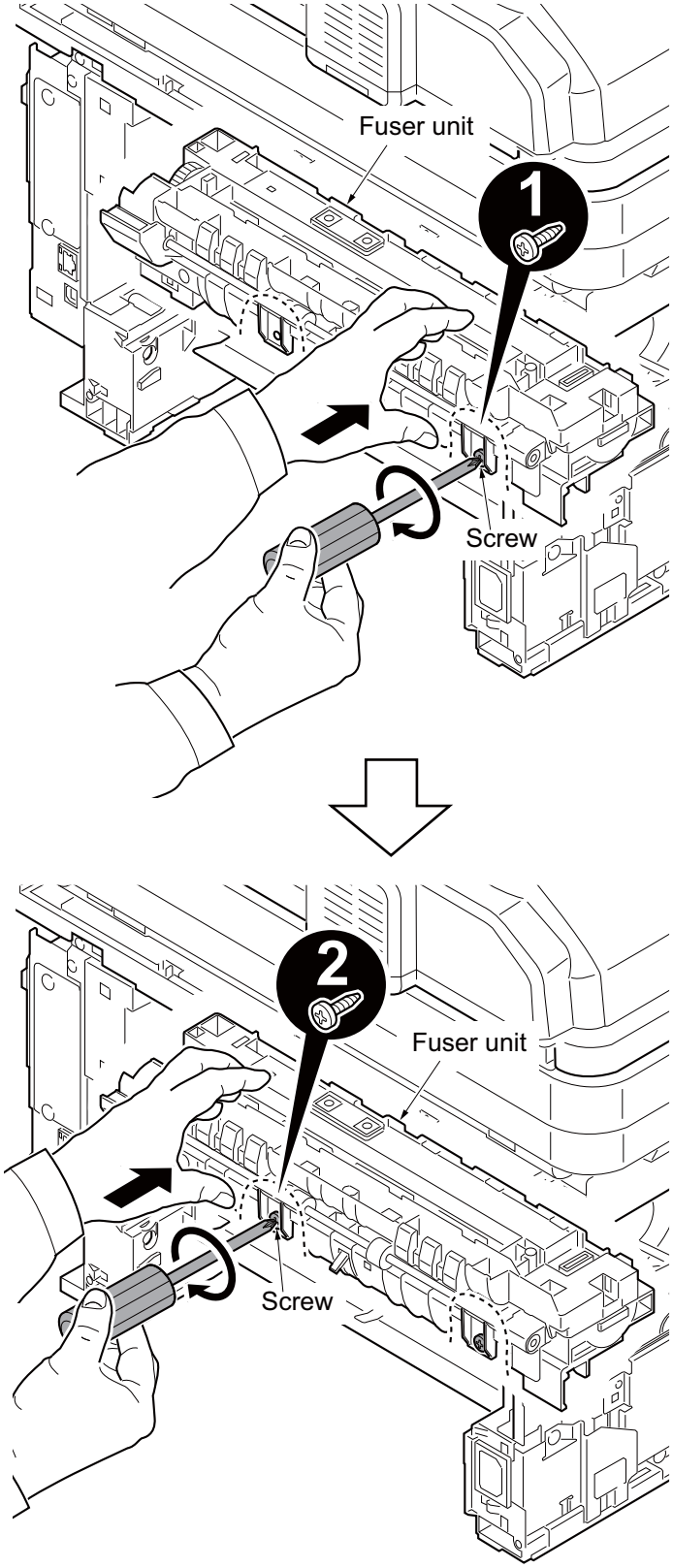

Figure 1-5-53

(2) Switching the fuser pressure

The fuser pressure may be decreased to suppress the print quality problems such as paper creases and curls.
It must be cautioned that decreasing the fuser pressure could cause loose toner fusing.

Procedure

1. Remove the cassette (See page 1-5-6).
2. Open the duplex cover.
3. Slide the fuser lever R and L.
   Normal: Flush with the front of the machine.
   Fuser pressure decreased: Flush with the rear of the machine.

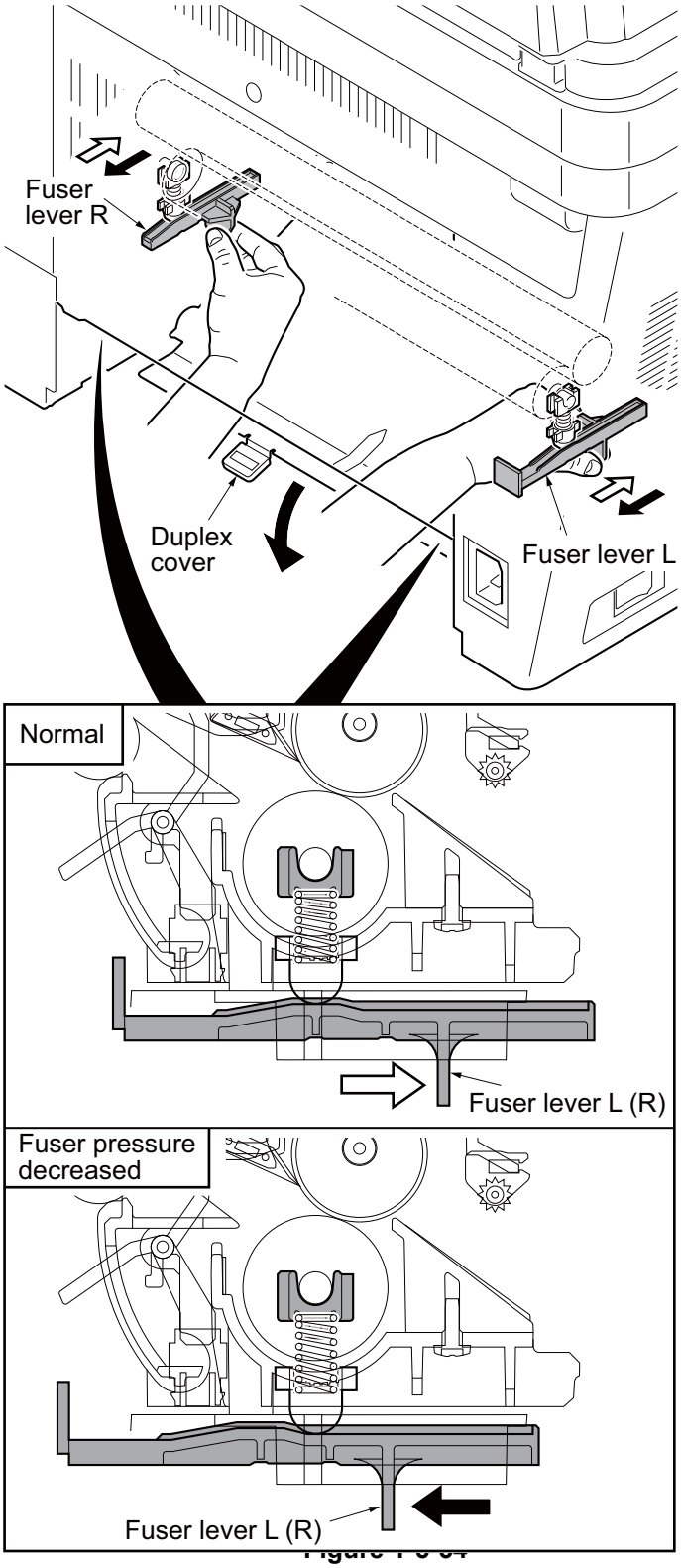

Figure 1-5-34

1-5-9 PWBs

(1) Detaching and refitting the control PWB

Procedure

1. Remove the FAX control PWB.
   (See page 1-5-48)
2. Remove the right cover.
   (See page 1-5-3)
3. Remove the five connectors from the scanner PWB.
4. Remove twenty connectors and two FFCs from the control PWB.
5. Remove the wires from the clamp.

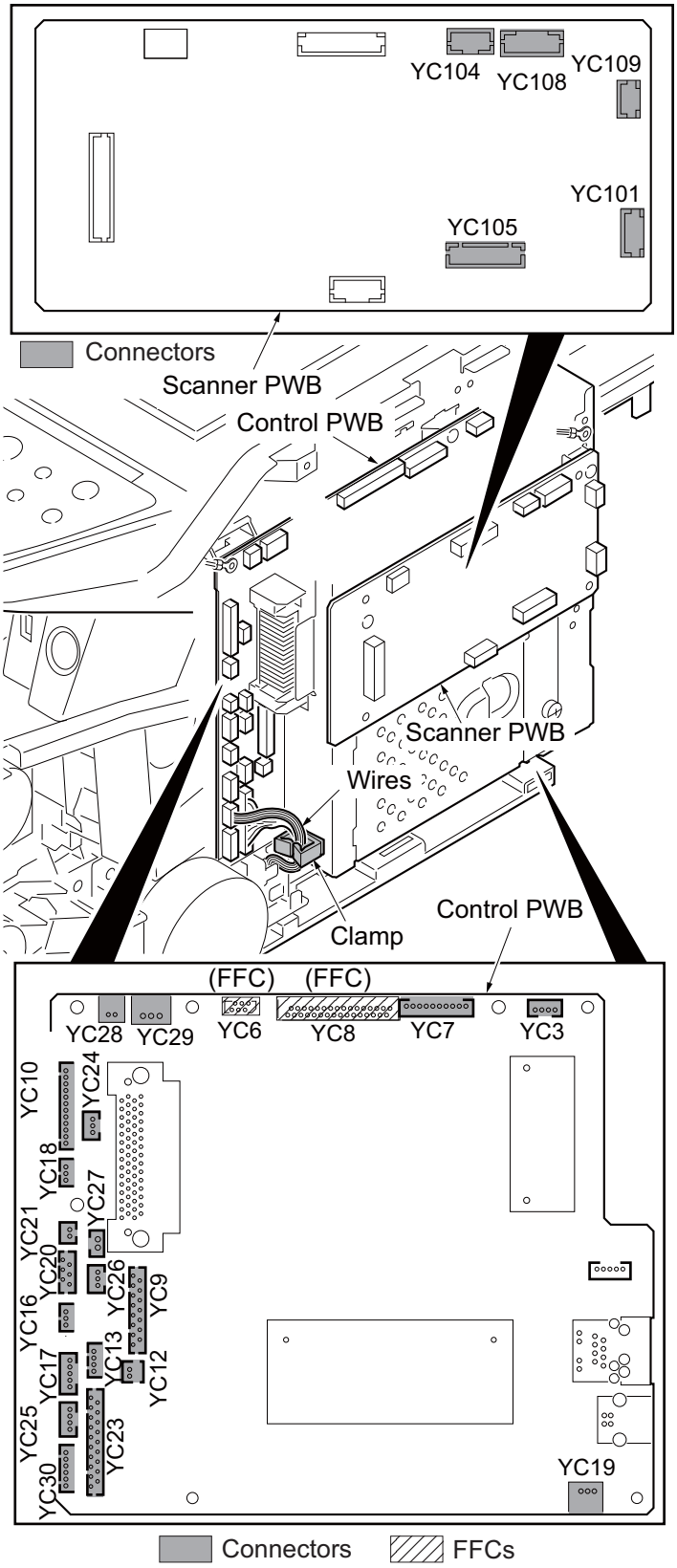

Figure 1-5-55

6. Remove five screws and then remove the control box.

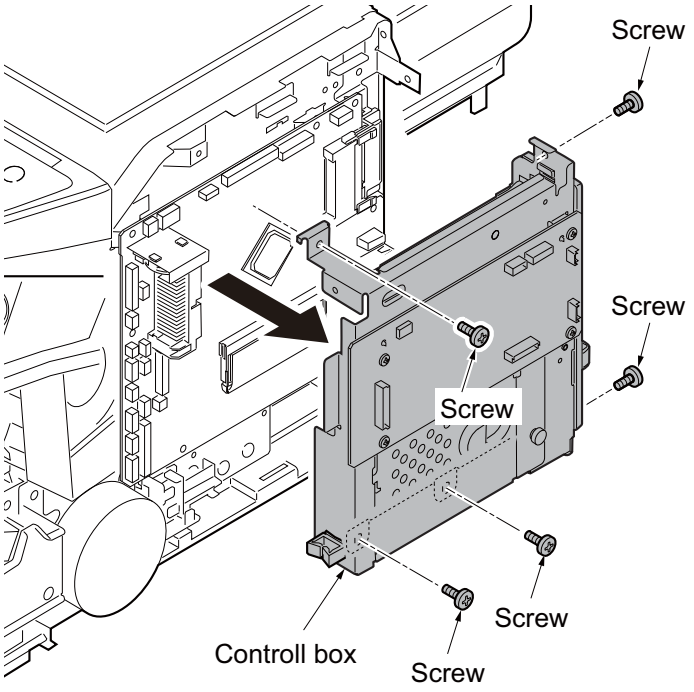

Figure 1-5-56

7. Remove seven screws and two grounding terminals and then remove the control PWB.

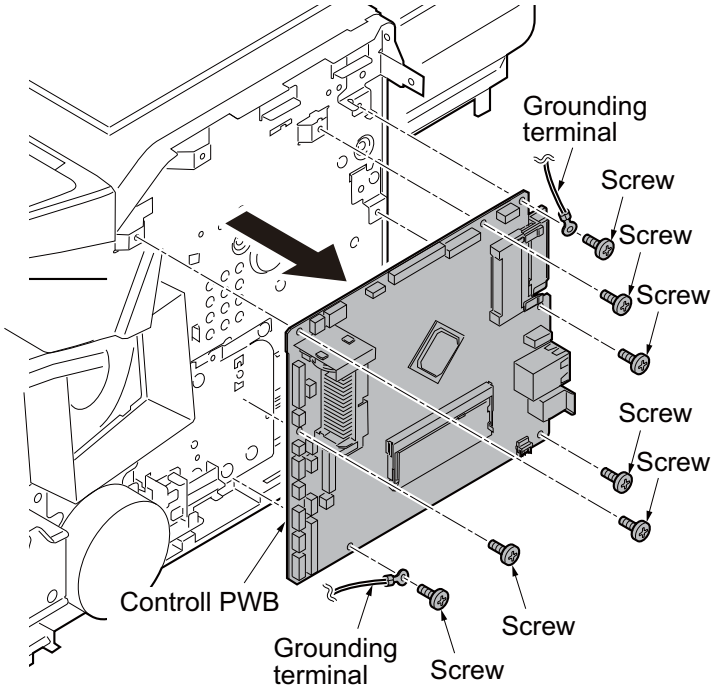

Figure 1-5-57

8. Remove five screws and then remove the control PWB.
9. Check or replace the control PWB and refit all the removed parts.

   To replace the control PWB, remove the EEPROM (U17) from the old control PWB and mount it to the new control PWB.

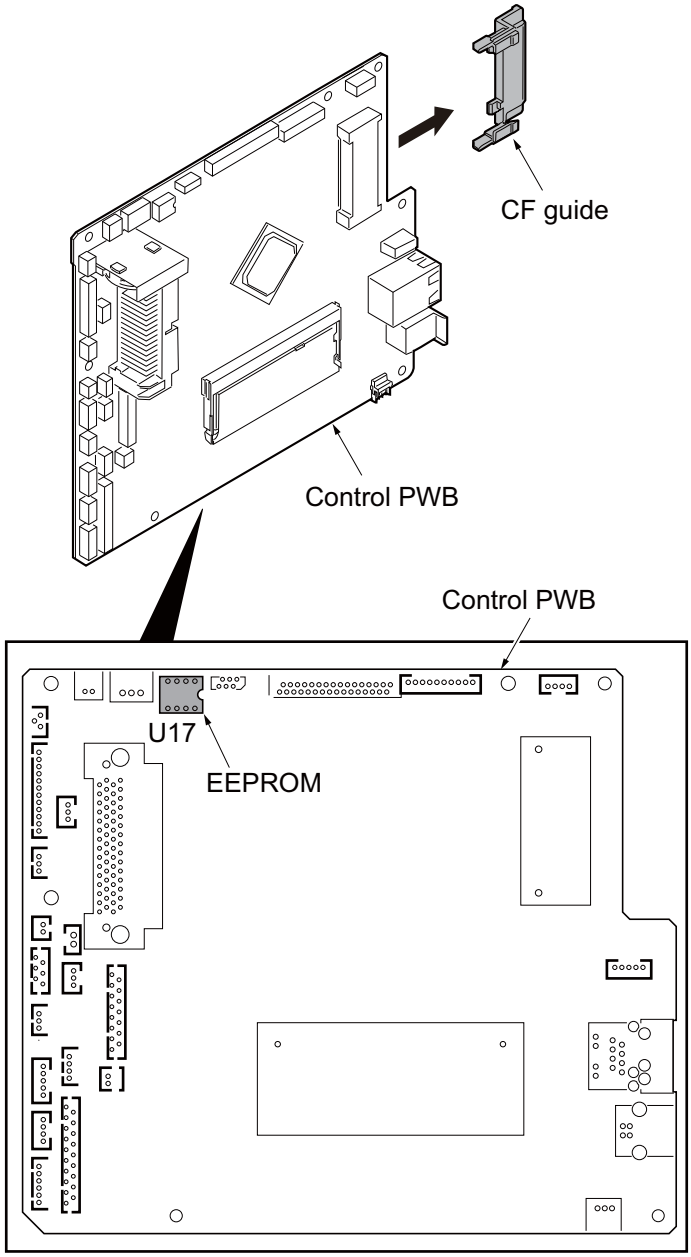

Figure 1-5-58

(2) Detaching and refitting the power source PWB

Procedure

1. Remove the left cover (See page 1-5-3).
2. Remove the wires from three clamps.
3. Remove five connectors from the power source PWB.

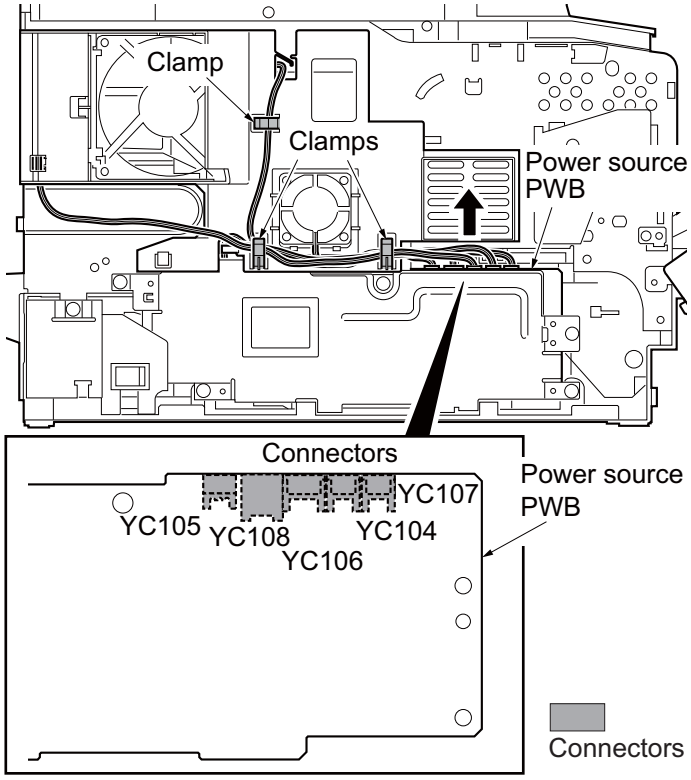

Figure 1-5-59

4. Unhook four hooks and then remove the frame left duct.
5. Remove the wire from the clamp.

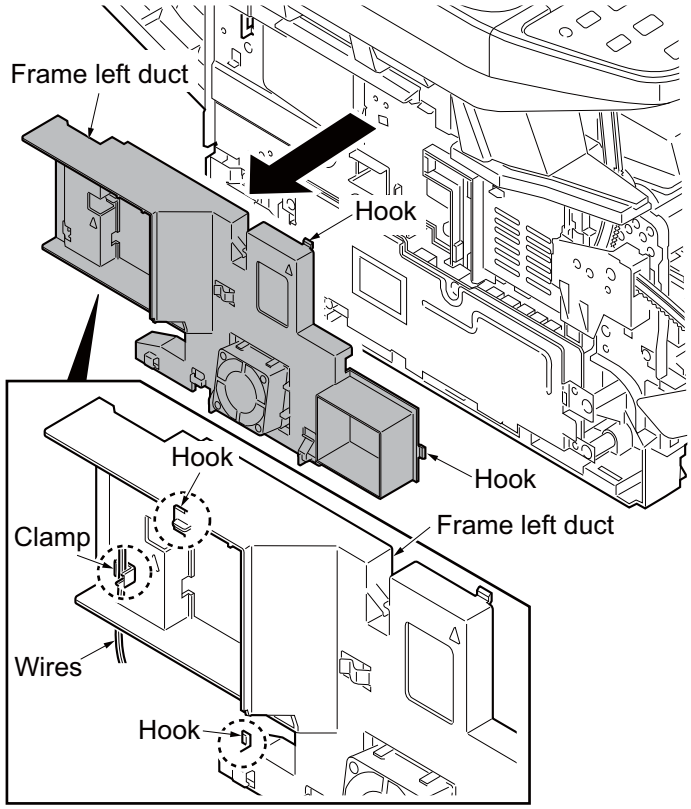

Figure 1-5-60

6. Remove the screw and then detach the inlet mount.

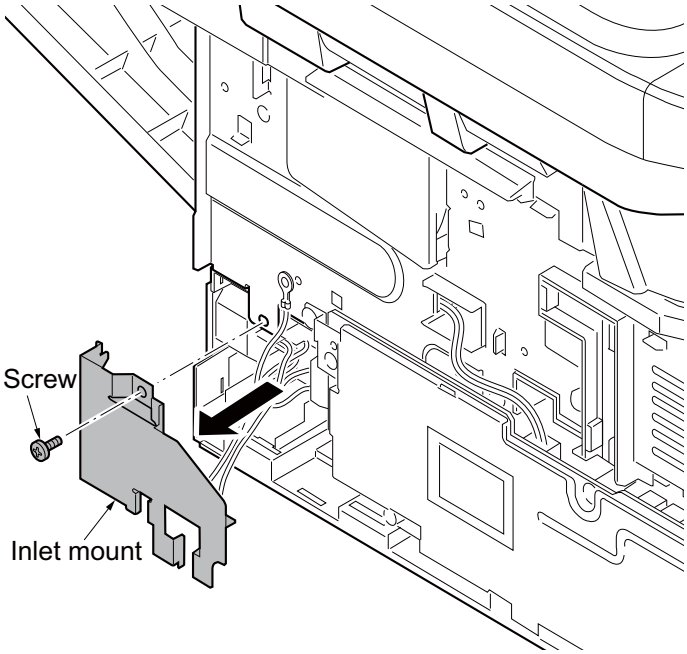

Figure 1-5-61

7. Remove five screws.
8. Remove two connectors and then remove the power source PWB assembly.

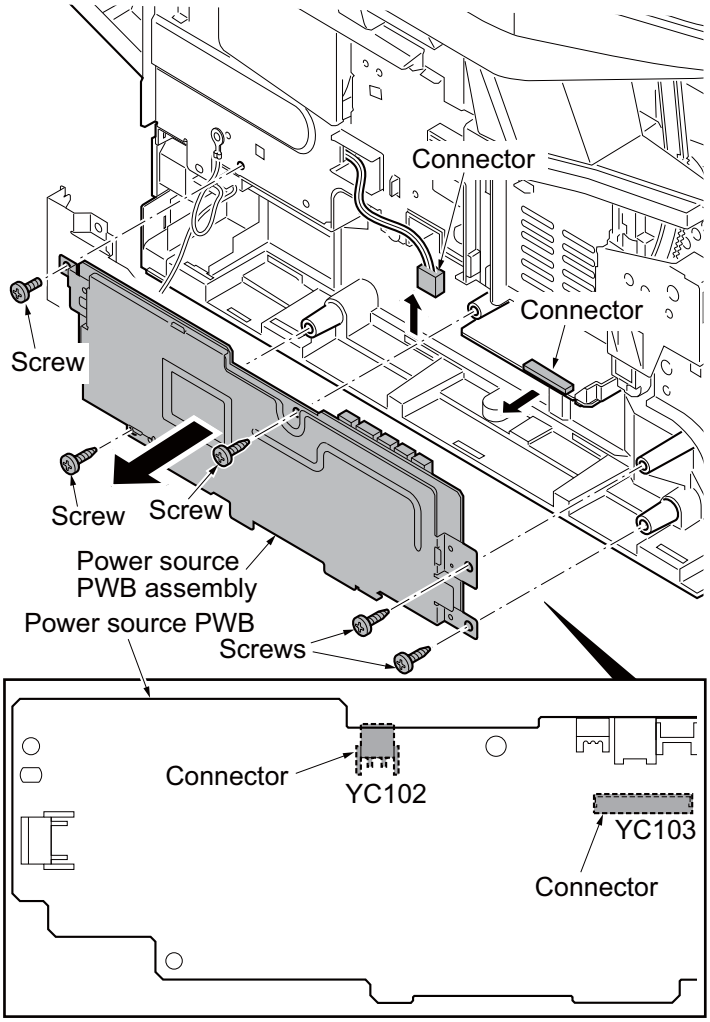

Figure 1-5-62

9. Remove four screws and then remove the power source PWB from the power source PWB plate.
10. Check or replace the power source PWB and refit all the removed parts.

    Caution: The power source PWB sheet must be installed in the specified position.

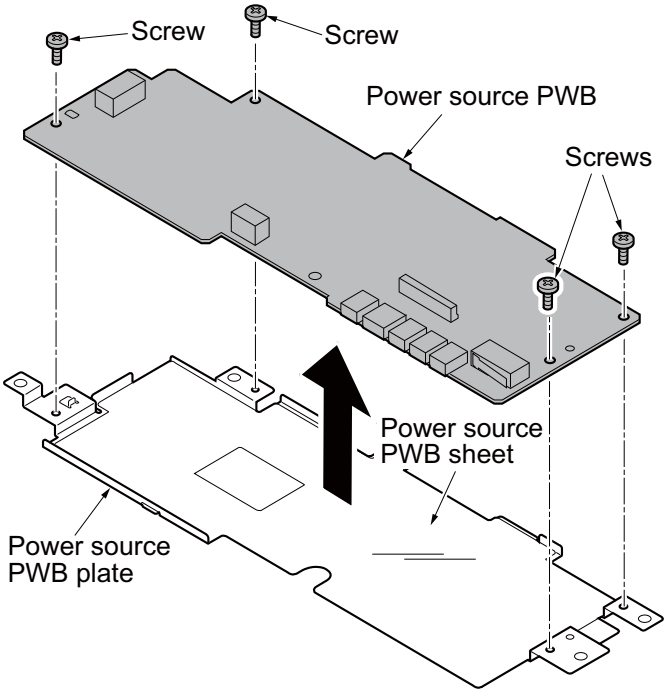

Figure 1-5-63

(3) Detaching and refitting the high voltage PWB

Procedure

1. Remove the developer unit (See page 1-5-27).
2. Remove the drum unit (See page 1-5-28).
3. Remove the cassette (See page 1-5-6).
4. Remove the left cover and right cover (See page 1-5-3).
5. Remove the power source PWB (See page 1-5-40).
6. Turn the machine with the front side up.
7. Remove the stopper.
8. Remove the DU holder.

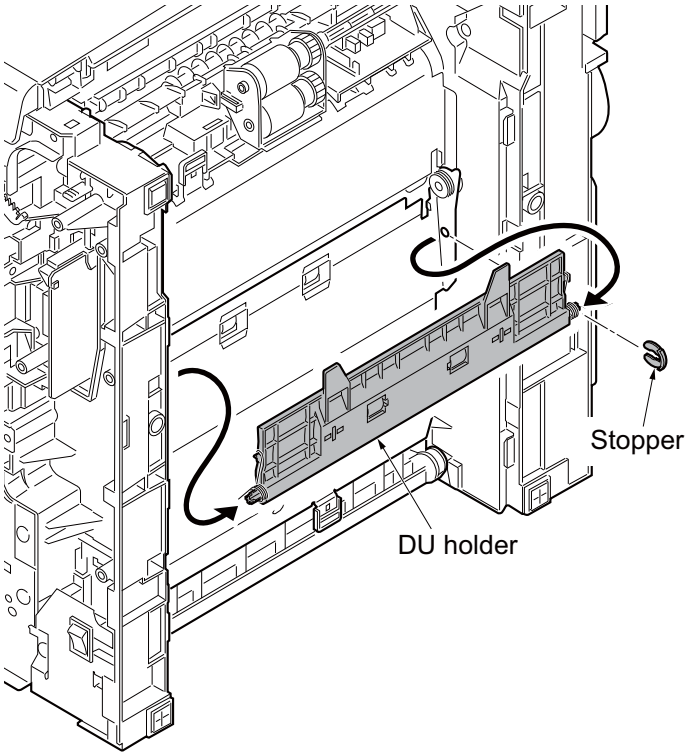

Figure 1-5-64

9. Pull the DU bush out.
10. Remove the DU cover assembly.

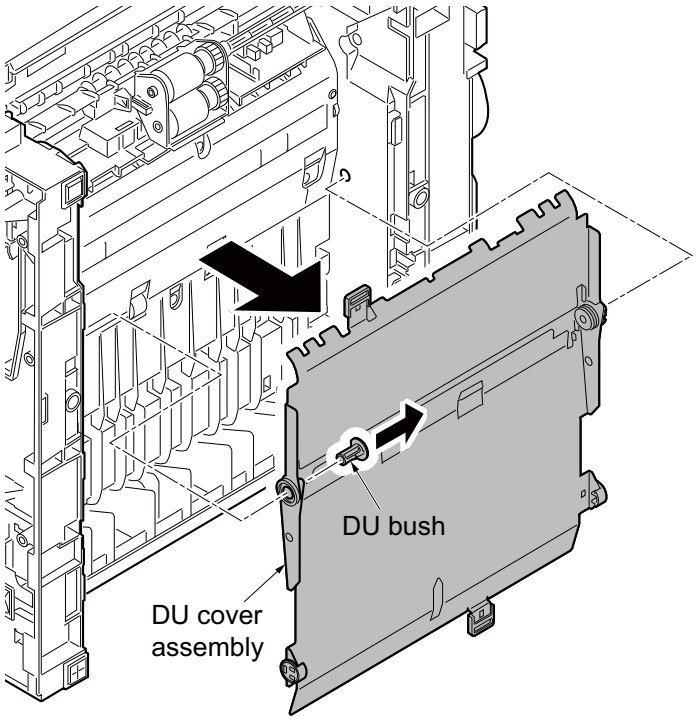

Figure 1-5-65

11. Remove four screws.
12. Unhook three hooks and then remove the lower base cover.

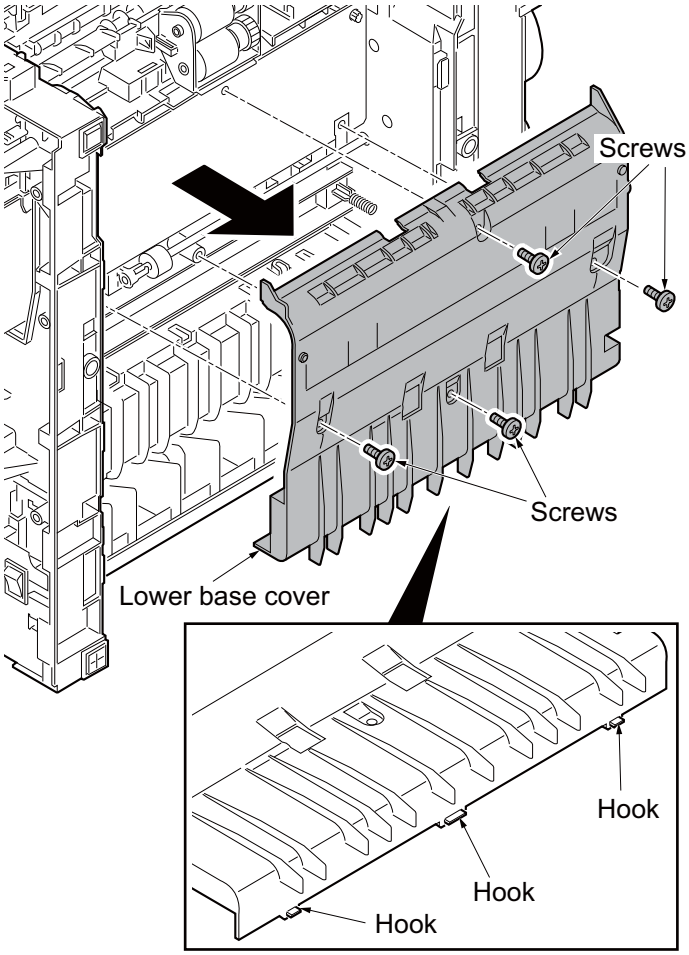

Figure 1-5-66

13. Remove the spring.
14. Remove the cassette pin.

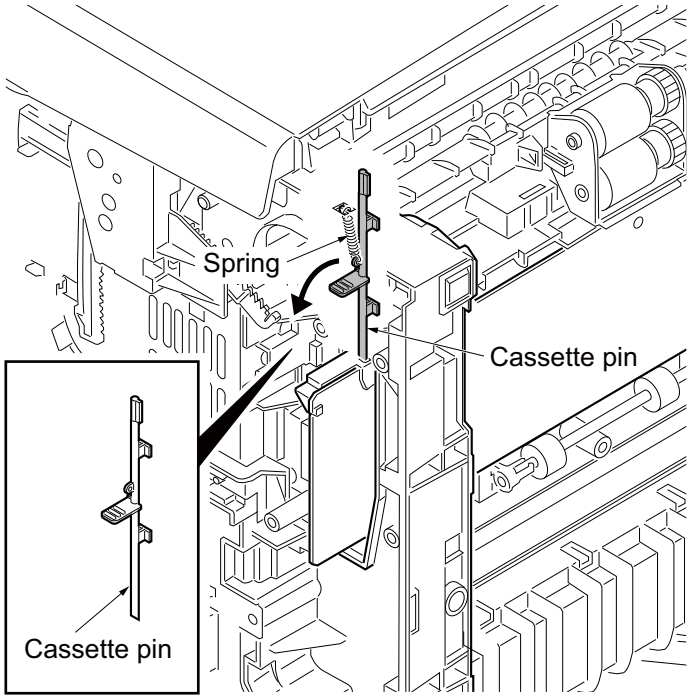

Figure 1-5-67

15. Remove two connectors and then remove the high voltage PWB.
16. Remove the cassette pin holder from the high voltage PWB.

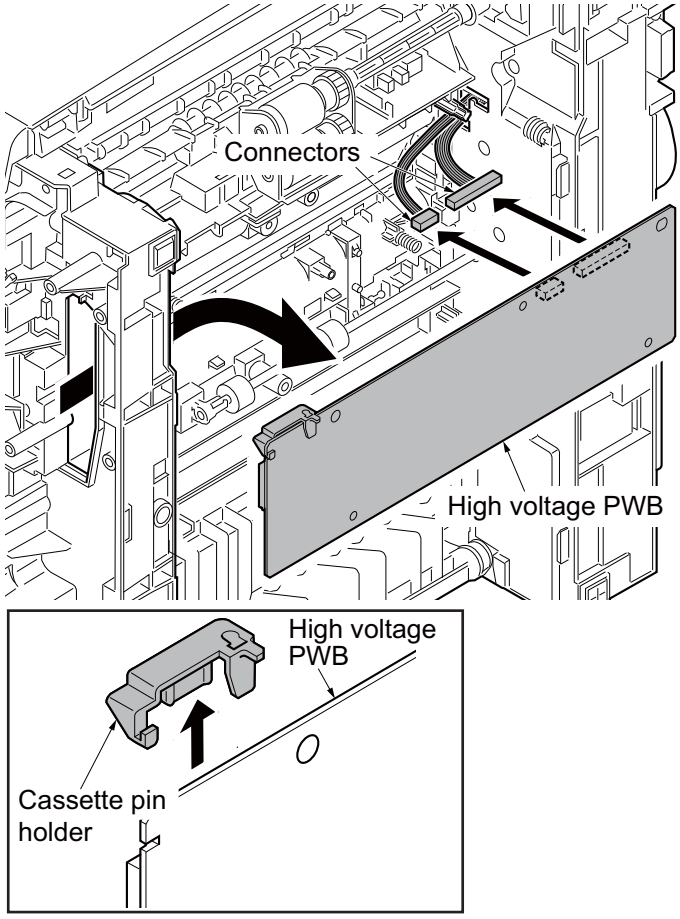

Figure 1-5-68

17. Check or replace the high voltage PWB and refit all the removed parts.

    When refitting the high voltage PWB, be careful about following points.

    - Position the ground plate so that it is atop the high voltage PWB.
    - Each interface is firmly in contact with each spring.
    - The bias contact pin must be installed in the specified position.
    - The cassette pin must be inserted in the cassette pin holder.

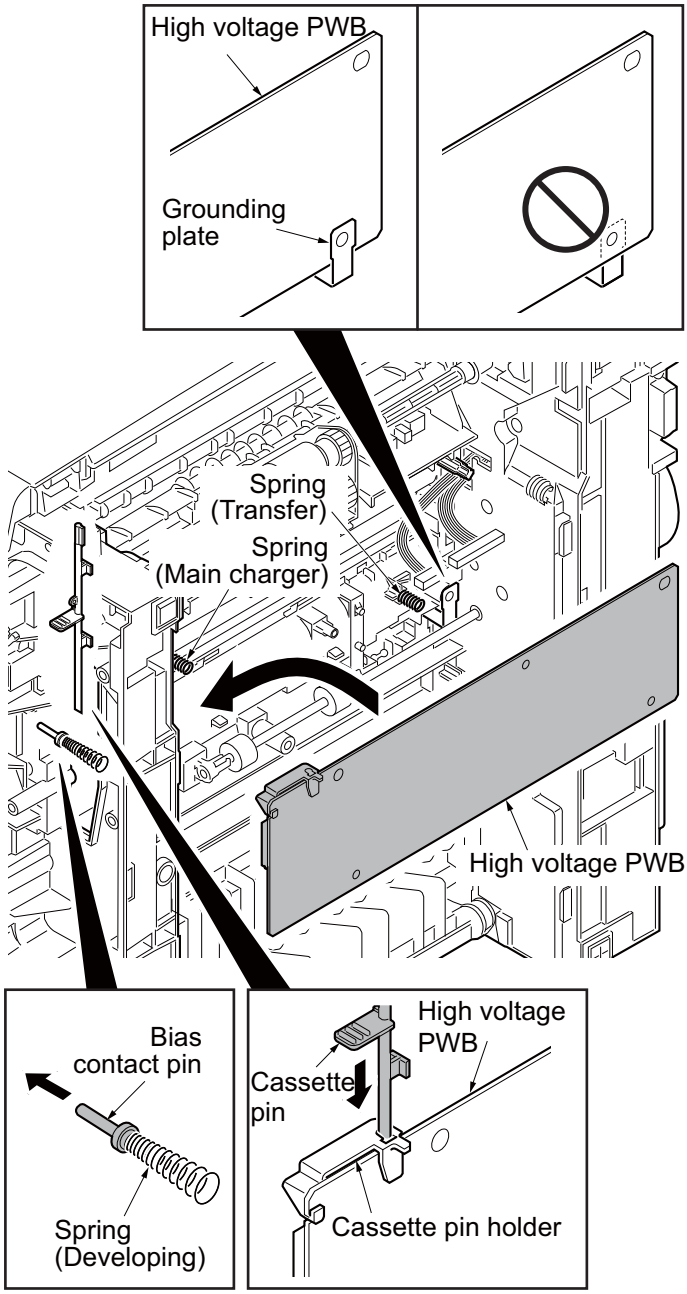

Figure 1-5-69

(4) Detaching and refitting the scanner PWB

Procedure

1. Remove the right cover (See page 1-5-3).
2. Remove six connectors and the FFC from the scanner PWB.

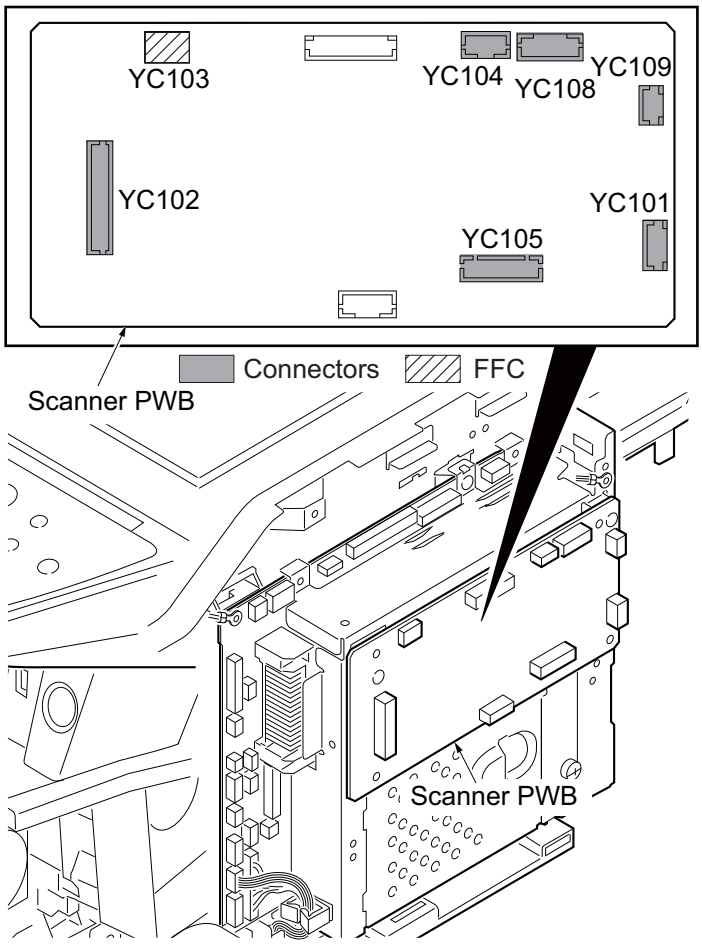

Figure 1-5-70

3. Remove four screws and then remove the scanner PWB.
4. Check or replace the scanner PWB and refit all the removed parts.

NOTE:
When the replacing the scanner PWB, perform following maintenance modes.

1. U425 Setting the target (see page 1-3-20)
2. U411 Adjusting the scanner automatically (see page 1-3-18)

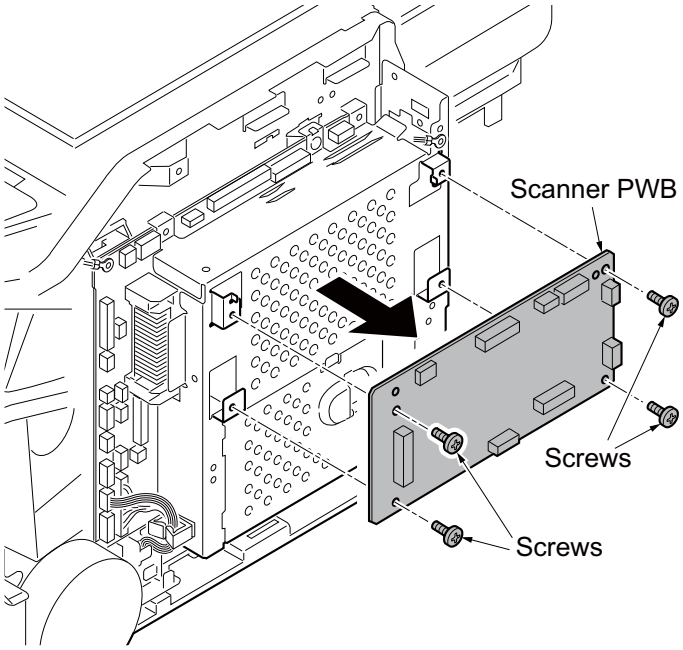

Figure 1-5-71

(5) Detaching and refitting the FAX control PWB

Procedure

1. Unhook the hook and then remove the controller box cover.

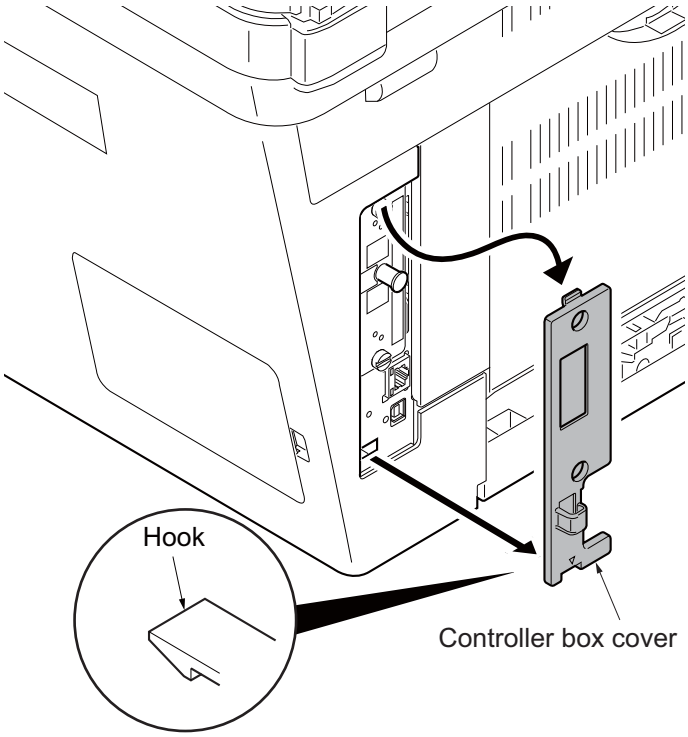

Figure 1-5-72

2. Remove two screws and then remove the FAX control PWB.
3. Check or replace the FAX control PWB and refit all the removed parts.

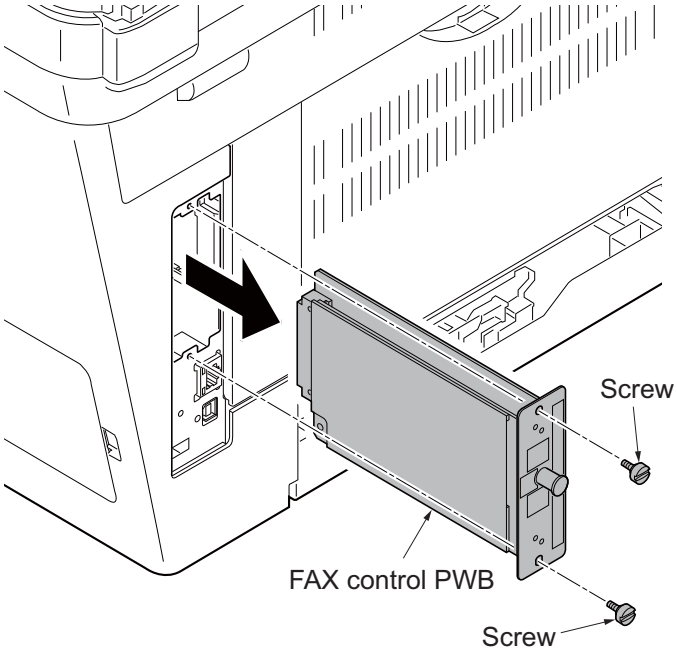

Figure 1-5-73

1-5-10 Others

(1) Detaching and refitting the main motor

Procedure

1. Remove the right cover (See page 1-5-3).
2. Remove the connector.
3. Remove the M3 screw and two M4 screws.
4. Remove the main motor.
5. Check or replace the main motor and refit all the removed parts.

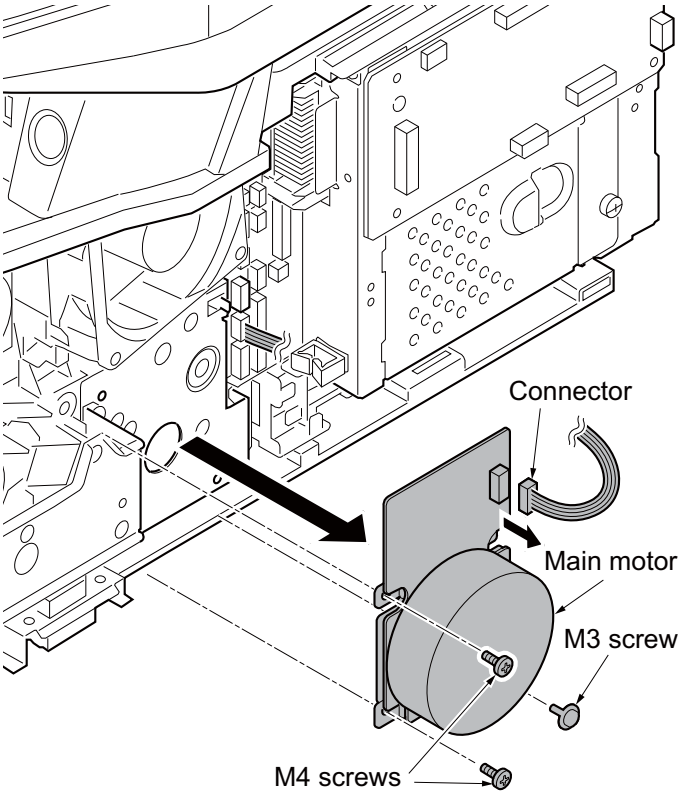

Figure 1-5-74

(2) Direction of installing the left cooling fan motor, right cooling fan motor and power source fan motor

When detaching or refitting a fan motor, be careful of the airflow direction (intake or exhaust).

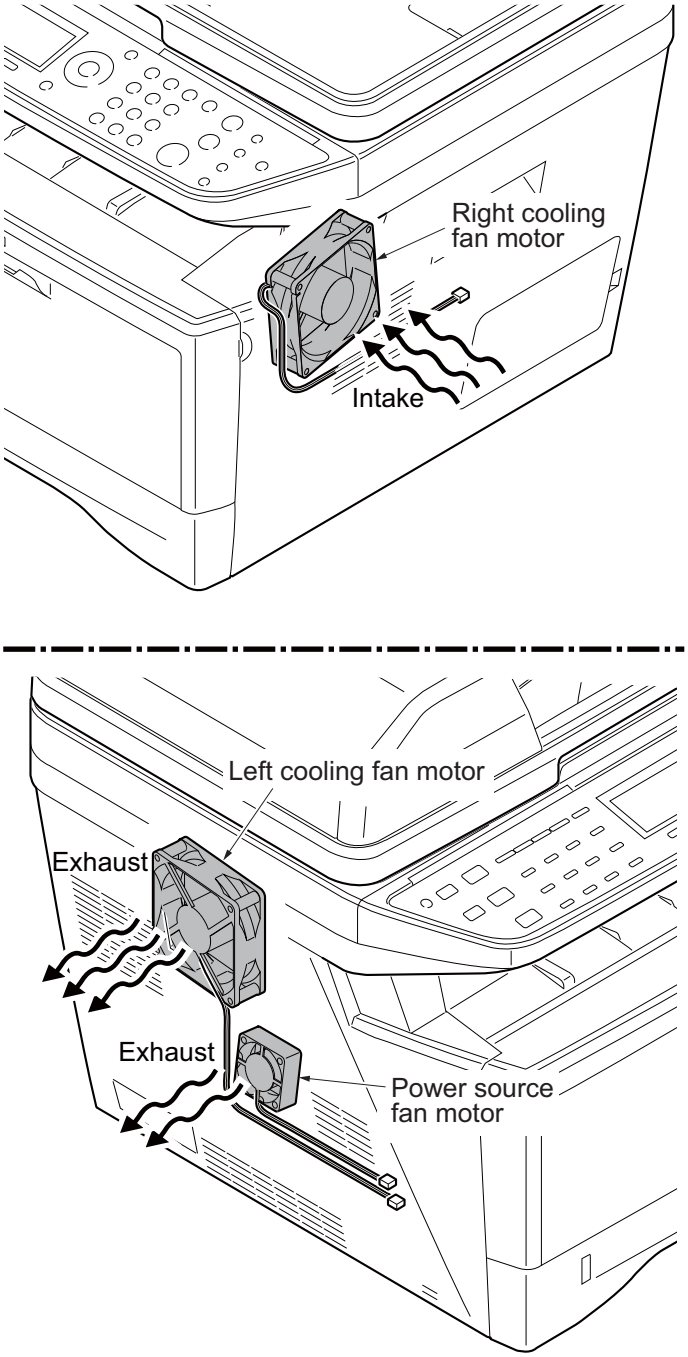

Figure 1-5-75

1-5-11 Document processor

(1) Detaching and refitting the DP rear cover and DP front cover

Procedure

1. Open the DP top cover.
2. Remove two screws.
3. Unhook the hook and then remove the DP rear cover.

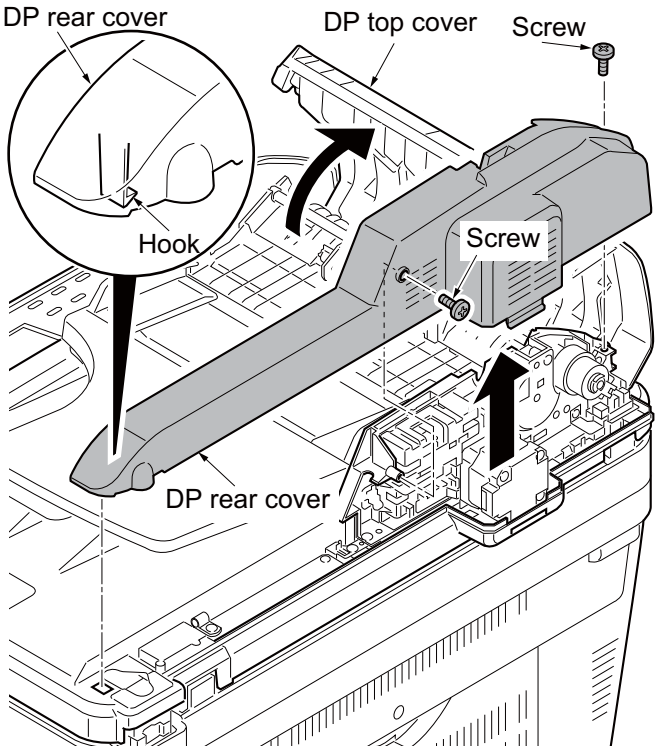

Figure 1-5-76

4. Unhook two hooks and then remove the DP front cover.

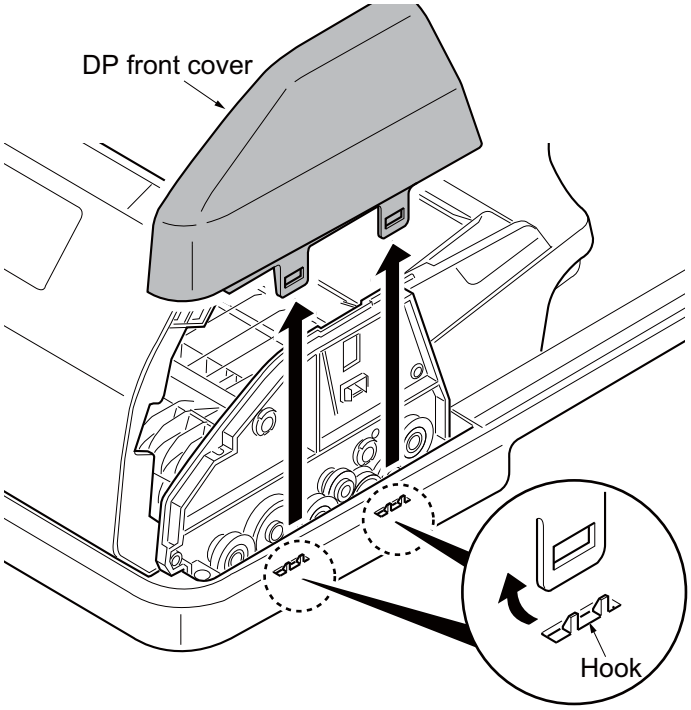

Figure 1-5-77

(2) Detaching and refitting the DP drive PWB

Follow the procedure below to check or replace the DP drive PWB.

Procedure

1. Remove the DP rear cover.
   (See page 1-5-51).
2. Remove eight connectors from the DP drive PWB.
3. Remove the screw and then remove the DP drive PWB.
4. Check or replace the DP drive PWB.
   Refit all the removed parts.

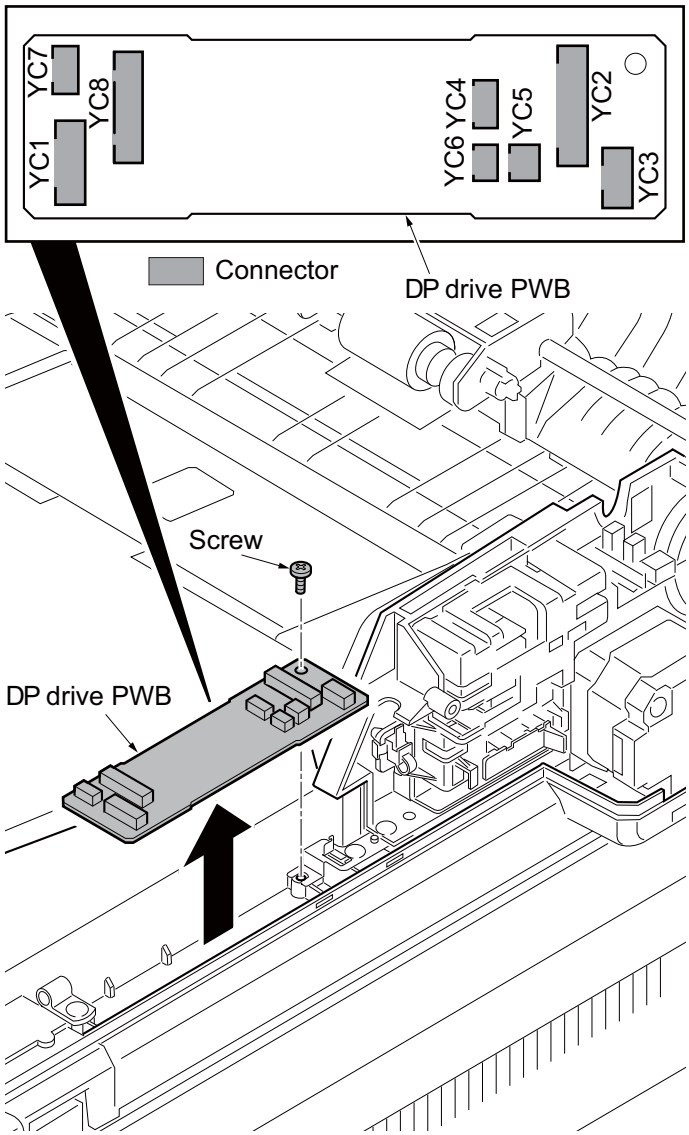

Figure 1-5-78

(3) Detaching and refitting the feed pulley and forwarding pulley

Follow the procedure below to clean or replace the feed pulley or forwarding pulley.

Procedure

1. Remove the DP rear cover and DP front cover (See page P.1-5-51).
2. Remove the stopper.
3. Remove the bush.

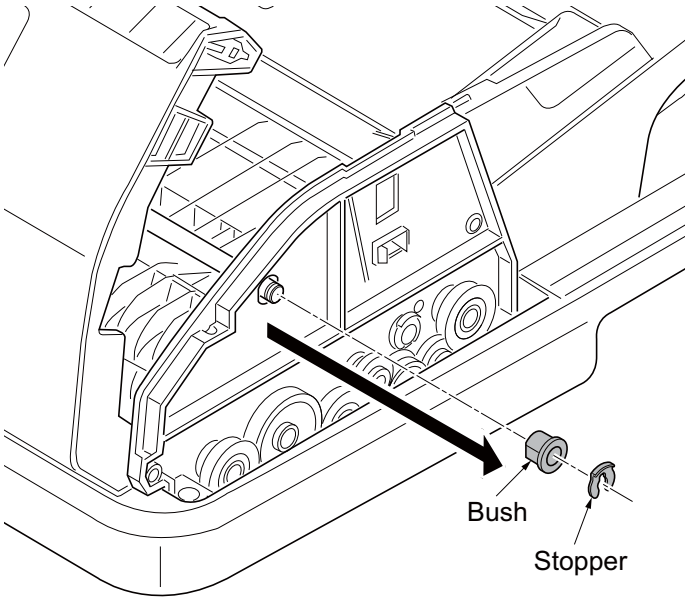

Figure 1-5-79

4. Remove the stopper A and then remove the DP paper feed clutch.
5. Remove the stopper B and then remove the PF collar, spring, spring collar S, pin and bush from the PF shaft.

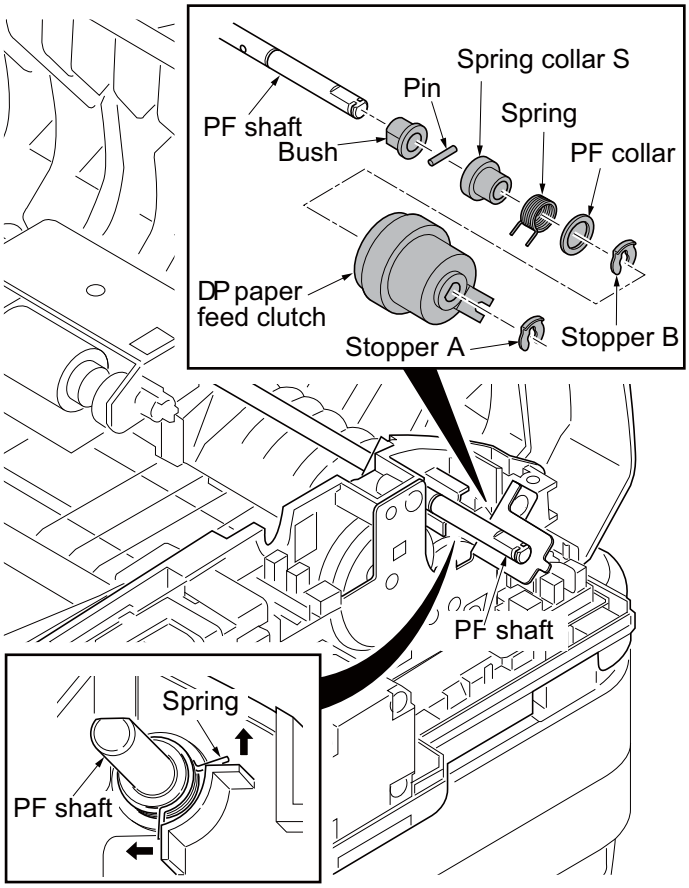

Figure 1-5-80

6. Remove the forwarding pulley assembly.

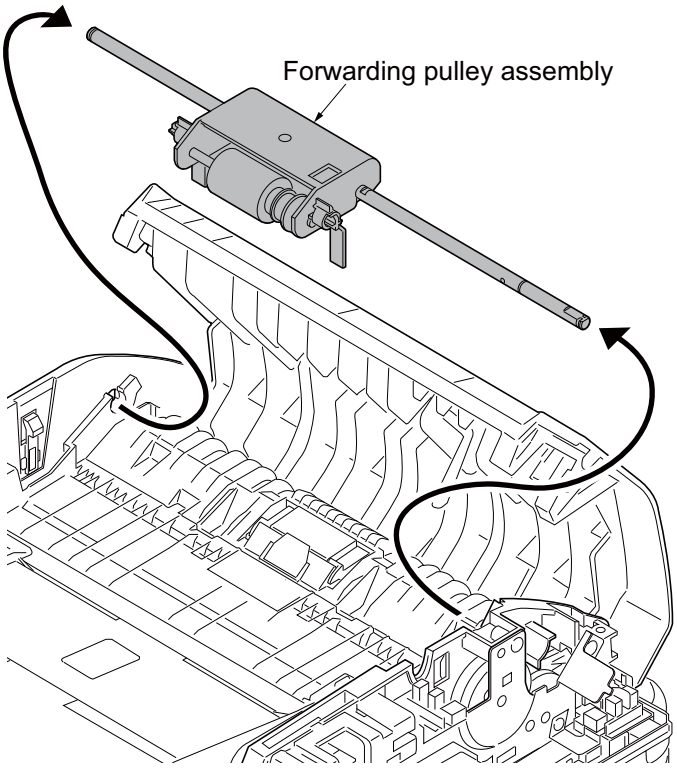

Figure 1-5-81

Detaching the feed pulley

7. Remove the stopper A.
8. Remove the feed pulley assembly from the LF holder.
9. Remove the stopper B.
10. Remove the PF collar, spring, spring collar S and pin from the PF shaft.
11. Remove the feed pulley, one-way clutch, PF pulley gear and pin from the PF shaft.

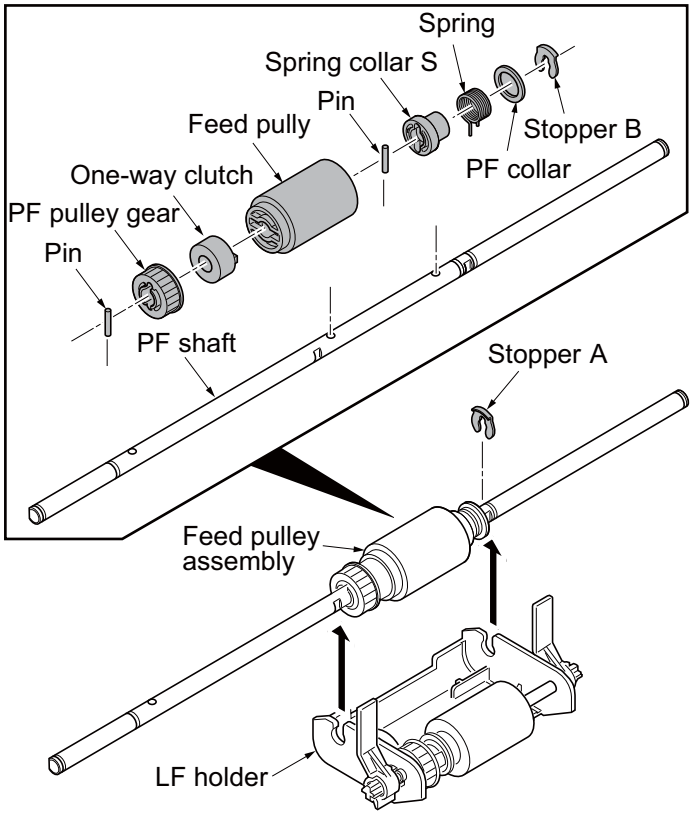

Figure 1-5-82

Detaching the forwarding pulley

12. Remove the PF stopper from the LF holder.
13. Remove the stopper.
14. Pull out the LF shaft and then remove the LF gear 18, forwarding feed joint gear and forwarding pulley.
15. Clean or replace the feed pulley and forwarding pulley.
    Refit all the removed parts.

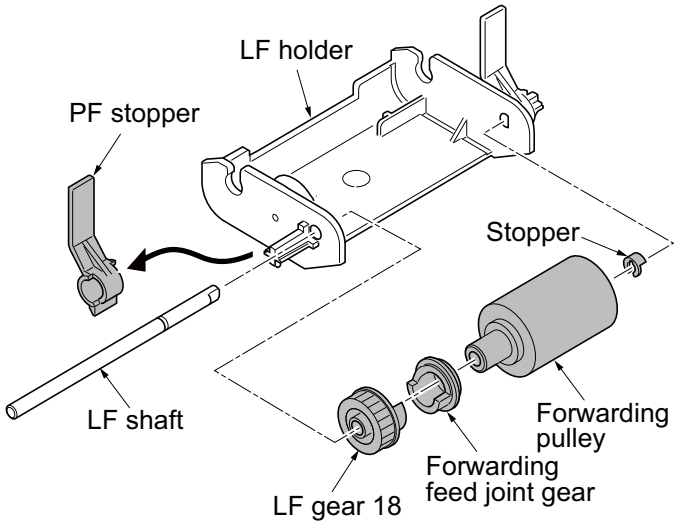

Figure 1-5-83

(4) Detaching and refitting the separation pad assembly

Follow the procedure below to clean or replace the separation pad assembly.

Procedure

1. Remove the forwarding pulley assembly (See page P.1-5-53).
2. Remove the separation pad assembly.
3. Clean or replace the separation pad assembly.
   Refit all the removed parts.

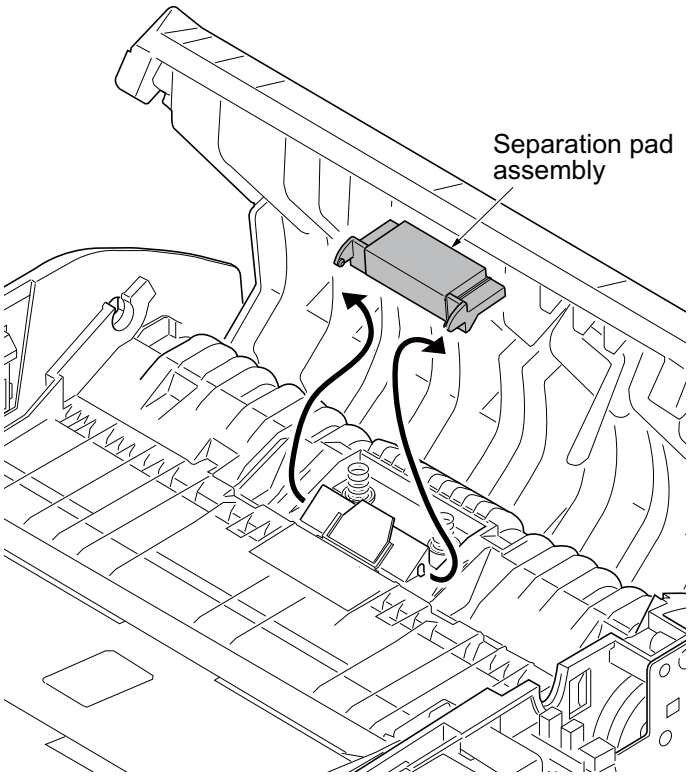

Figure 1-5-84

1-6-1 Upgrading the firmware

Follow the procedure below to upgrade the firmware of control PWB (main controller and engine) and scanner PWB.

Preparation

Extract the file that has the download firmware and put them in the USB Memory.

Procedure

1. Turn ON the power switch and confirm if the screen shows “Ready to print” then, turn OFF the power switch.
2. Insert USB memory that has the firmware in the USB memory slot.
3. Turn ON the power switch.
4. About 40 seconds later, “FW-Update” will be displayed and blinking the memory LED (this shows to start the download).
5. Display the software that now upgrading (5 minutes).

   “FW- Update [CTRL]”
   “[ENGN]”
   “[SCAN]”
6. Display the completion of the upgrade (Memory LED is ON condition).
7. Cut the power supply by pulling out the power cable and remove the USB memory.

* : After the print engine farm is downloaded, it is not possible to turn it off with the power switch.

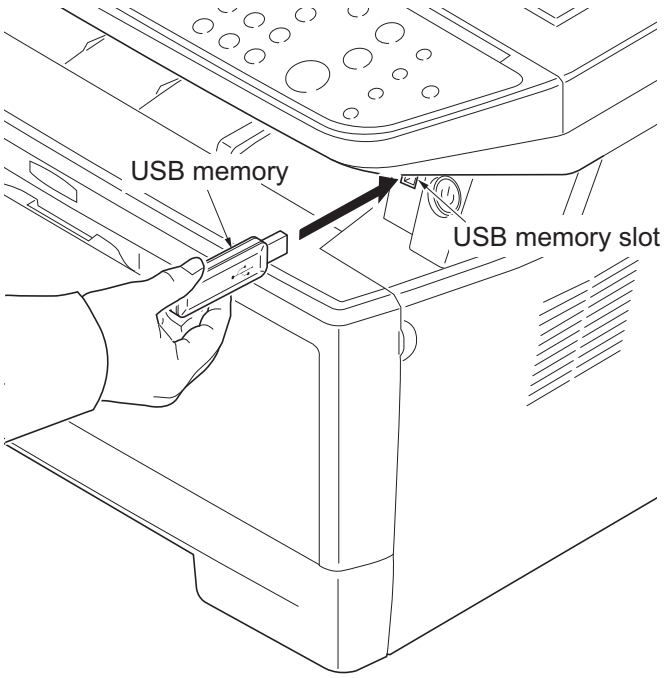

Figure 1-6-1

Check the result of the version up

1. Output the service status by the U000 and confirm the firmware version.

1-6-2 Remarks on control PWB replacement

When replacing the control PWB, remove the EEPROM (U17) from the control PWB that has been removed and then reattach it to the new control PWB.

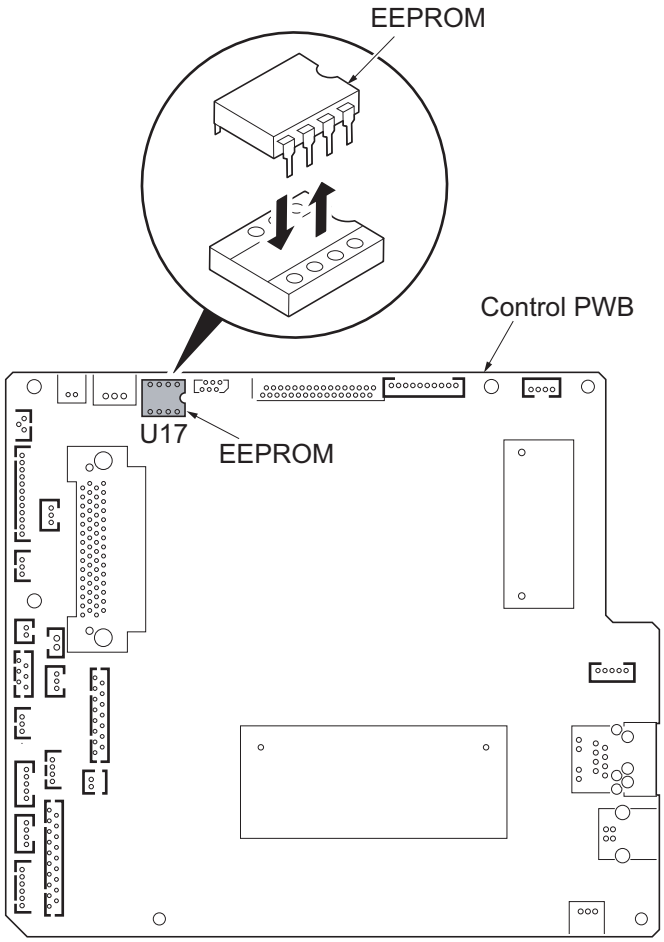

Figure 1-6-2

Detaching of EEPROM

1. The flat screwdriver is inserted between EEPROM and socket.
2. Detach it little by little right and left and alternately while noting the transformation and the damage of the pin.

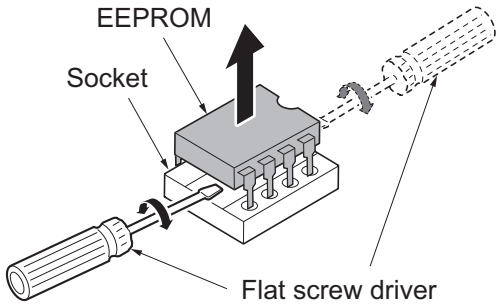

Figure 1-6-3

2-1-1 Paper feed/conveying section

Paper feed/conveying section consists of the paper feed unit that feeds paper from the cassette and the MP tray paper feed unit that feeds paper from the MP tray, and the paper conveying section that conveys the fed paper to the transfer/separation section.

(1) Cassette paper feed section

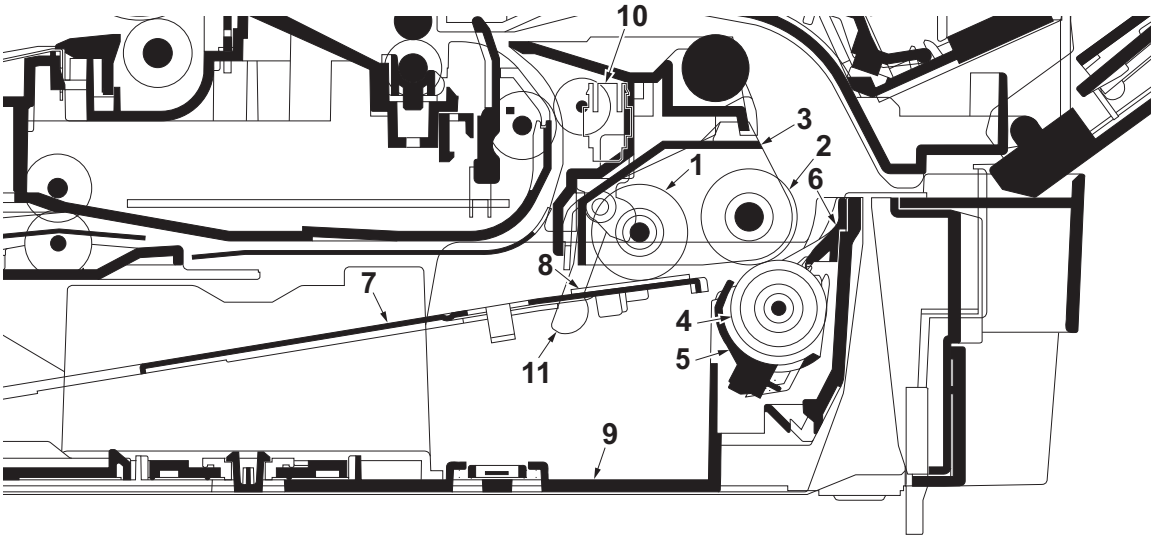

Figure 2-1-1 Cassette paper feed section

1. Pickup roller
2. Paper feed roller
3. Feed holder
4. Retard roller
5. Retard holder
6. Retard guide
7. Bottom plate
8. Bottom pad
9. Cassette base
10. Paper sensor
11. Actuator (paper sensor)

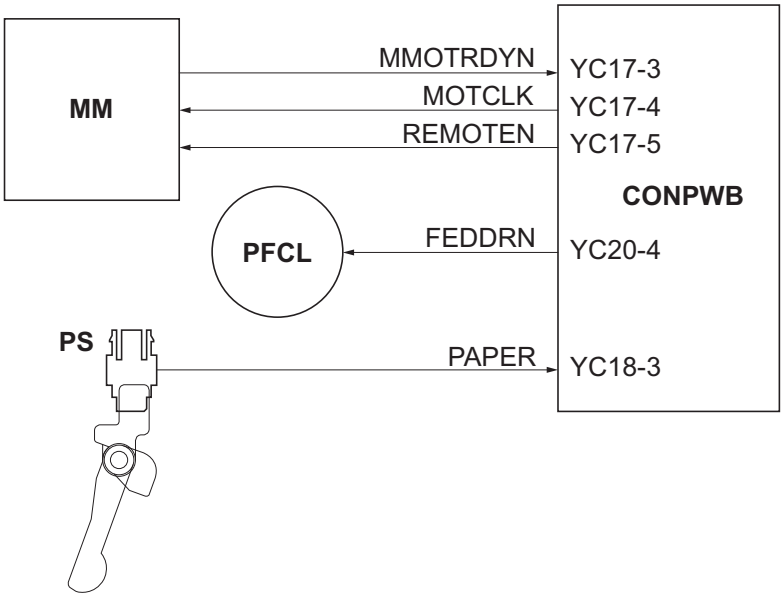

Figure 2-1-2 Cassette paper feed section block diagram

(2) MP tray paper feed section

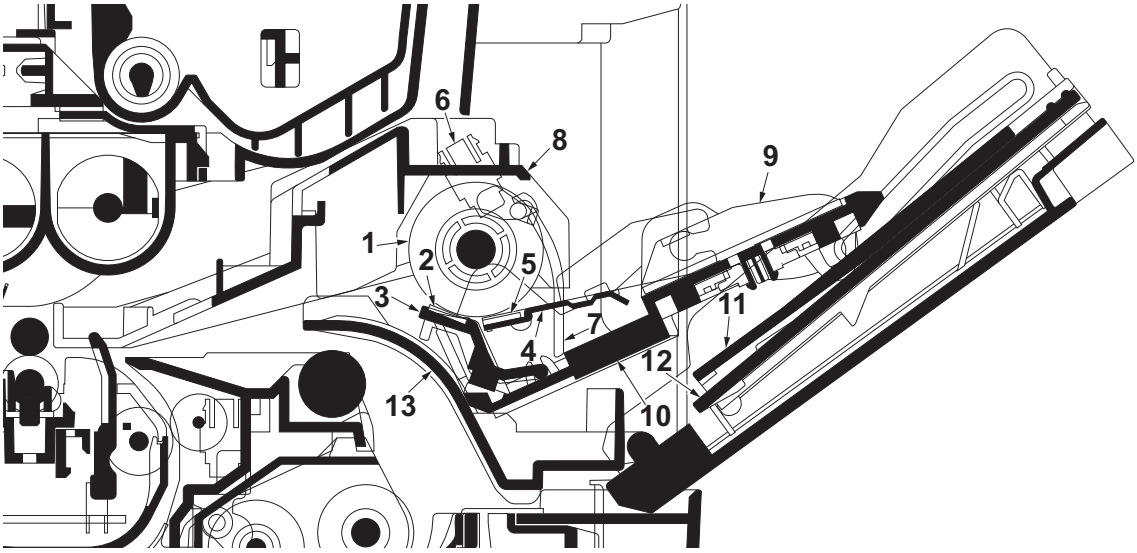

Figure 2-1-3 MP tray paper feed section

1. MP paper feed roller
2. MPF separation pad
3. MPF separator
4. MPF bottom plate
5. MPF friction pad
6. MP paper sensor
7. Actuator (MP paper sensor)
8. MPF frame
9. MPF guide R/L
10. MPF base
11. MPF middle tray
12. MPF upper tray
13. MPF turn guide

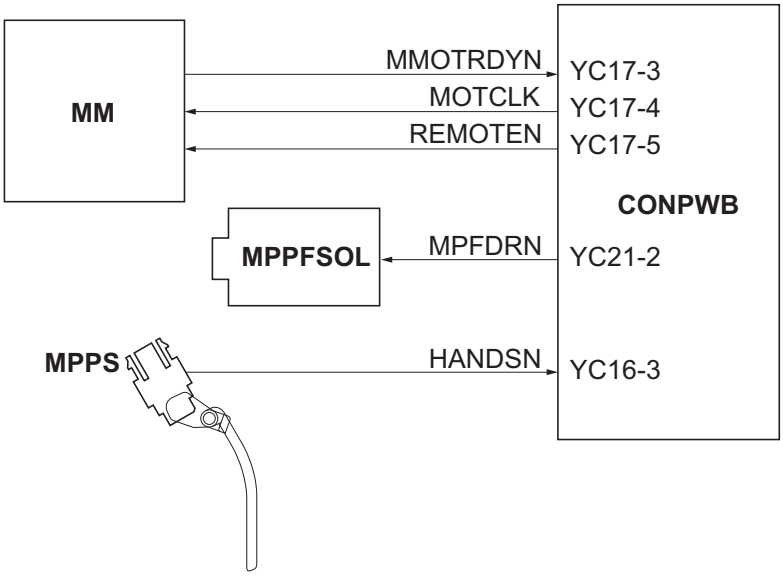

Figure 2-1-4 MP tray paper feed section block diagram

(3) Paper conveying section

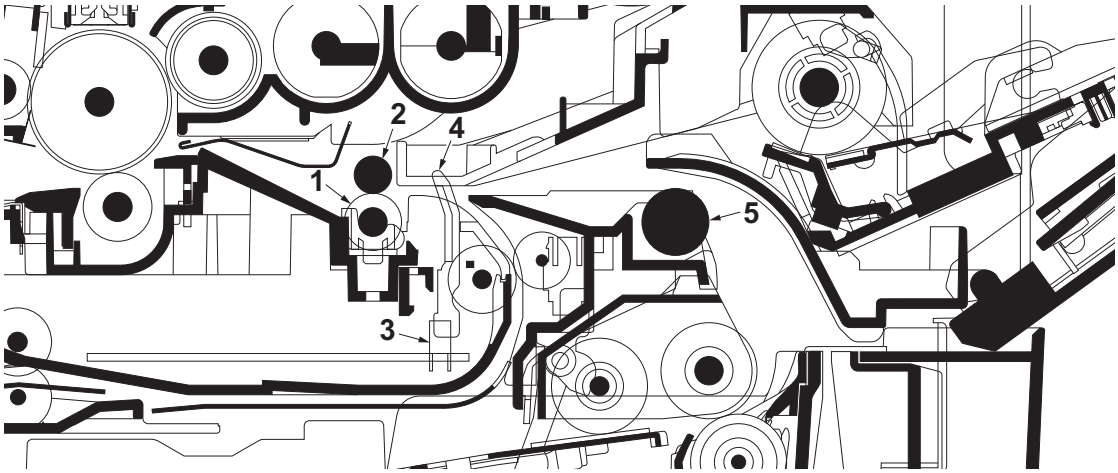

Figure 2-1-5 Paper conveying section

1. Lower registration roller
2. Upper registration roller
3. Registration sensor
4. Actuator (registration sensor)
5. Feed pulley

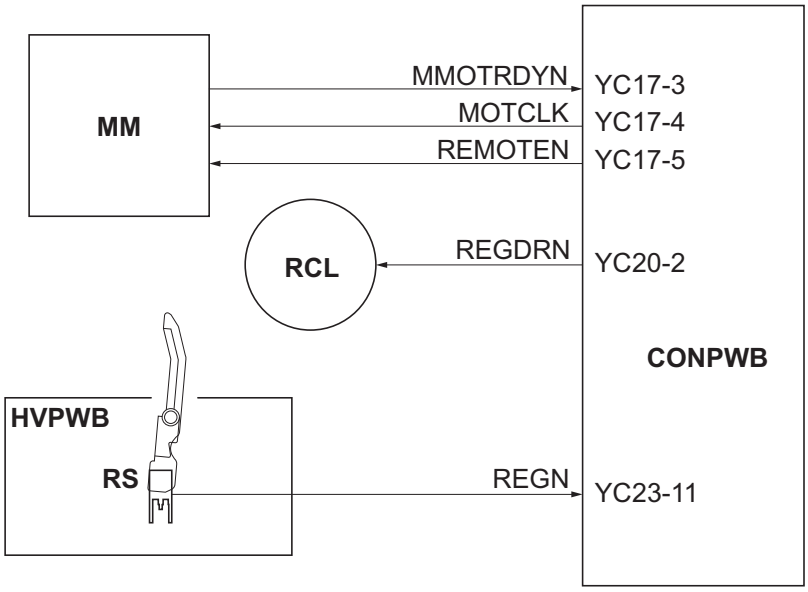

Figure 2-1-6 Paper conveying section block diagram

2-1-2 Drum section

(1) Drum section

The durable layer of organic photoconductor (OPC) is coated over the aluminum cylinder base. The OPC tend to reduce its own electrical conductance when exposed to light. After a cyclic process of charging, exposure, and development, the electrostatic image is constituted over the OPC layer.
Since the OPC is materialized by resin, it is susceptible to damage caused by sharp edges such as a screw-driver, etc., resulting in a print quality problem. Also, finger prints can cause deterioration of the OPC layer, therefore, the drum (in the drum unit) must be handled with care. Substances like water, alcohol, organic solvent, etc., should be strictly avoided.
As with all other OPC drums, the exposure to a strong light source for a prolonged period can cause a print quality problem. The limit is approximately 500 lux for less than five minutes. If the drum (drum unit) remains removed from the machine, it should be stored in a cool, dark place.
.

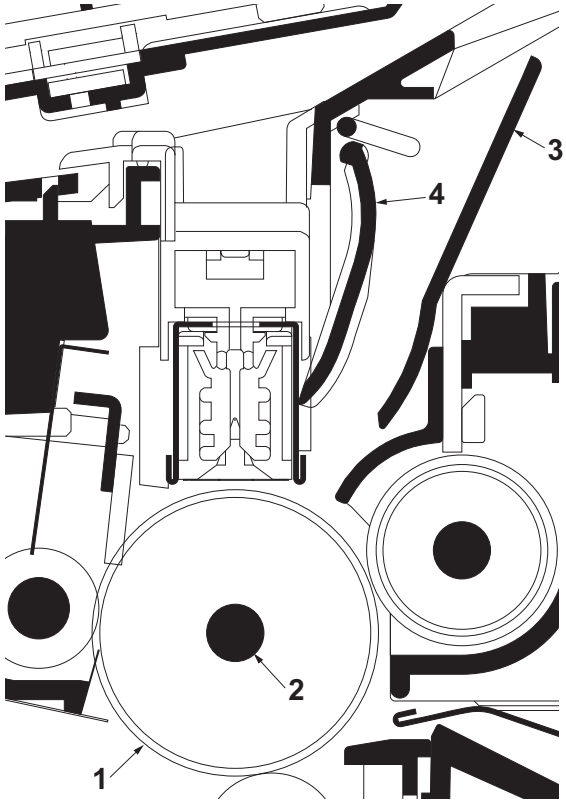

Figure 2-1-7 Drum unit

1. Drum
2. Drum shaft
3. Drum cover A
4. Drum cover B

(2) Main charger unit

As the drum rotates in a “clean (neutral)” state, its photoconductive layer is given a uniform, positive (+) corona charge dispersed by the main charger wire. Due to high-voltage scorotron charging, the charging wire can get contaminated by oxidization after a long run. Therefore, the charger wire must be cleaned at a specific interval. Cleaning the charging wire prevents print quality problems such as black streaks.

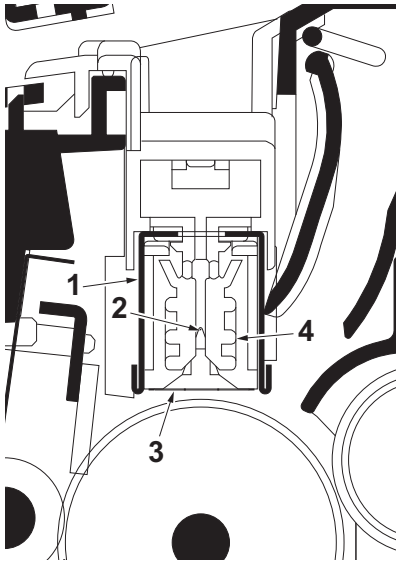

Figure 2-1-8 Main charger unit

1. Main charger shield
2. Main charger wire
3. Main charger grid
4. Main charger wire cleaner

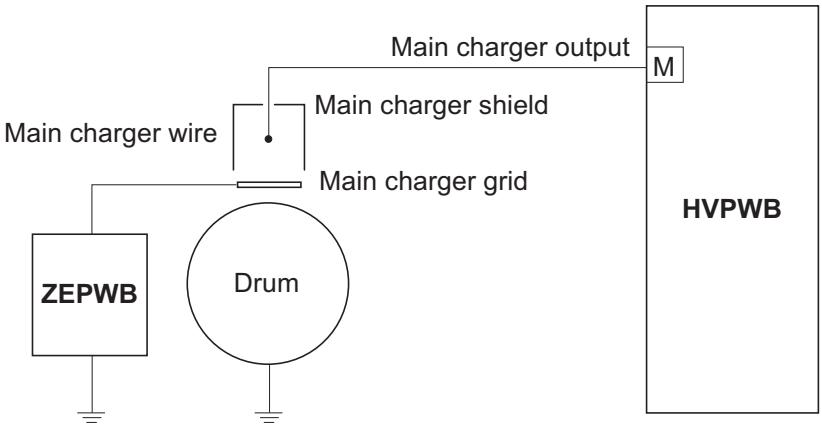

Figure 2-1-9 Drum unit and main charger unit block diagram

2-1-3 Optical section

(1) Scanner unit

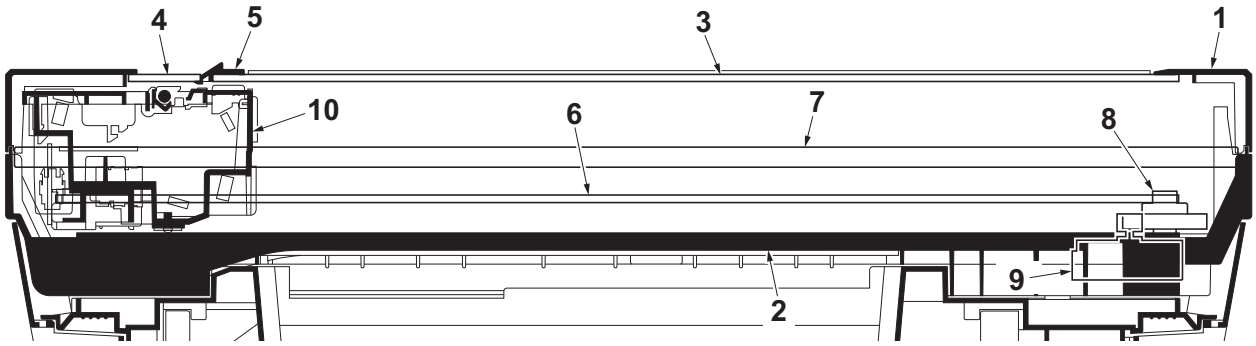

Figure 2-1-10 Scanner unit

1. ISU top frame
2. ISU bottom frame
3. Contact glass
4. DP contact glass
5. Size indicator plate
6. ISU belt
7. ISU shaft
8. ISU gear 63/32
9. ISU motor
10. Image scanner unit (ISU)

(2) Image scanner unit (ISU)

The original image is illuminated by the LED and scanned by the CCD image sensor in the CCD PWB (CCD-PWB) via the four mirrors and ISU lens, the reflected light being converted to an electrical signal.
If a document processor (DP) is used, the image scanner unit stops at the position of the DP contact glass and scans sequentially one row of the image on the original in synchronization with the moving timing of the original in the sub scan direction by driving the DP.

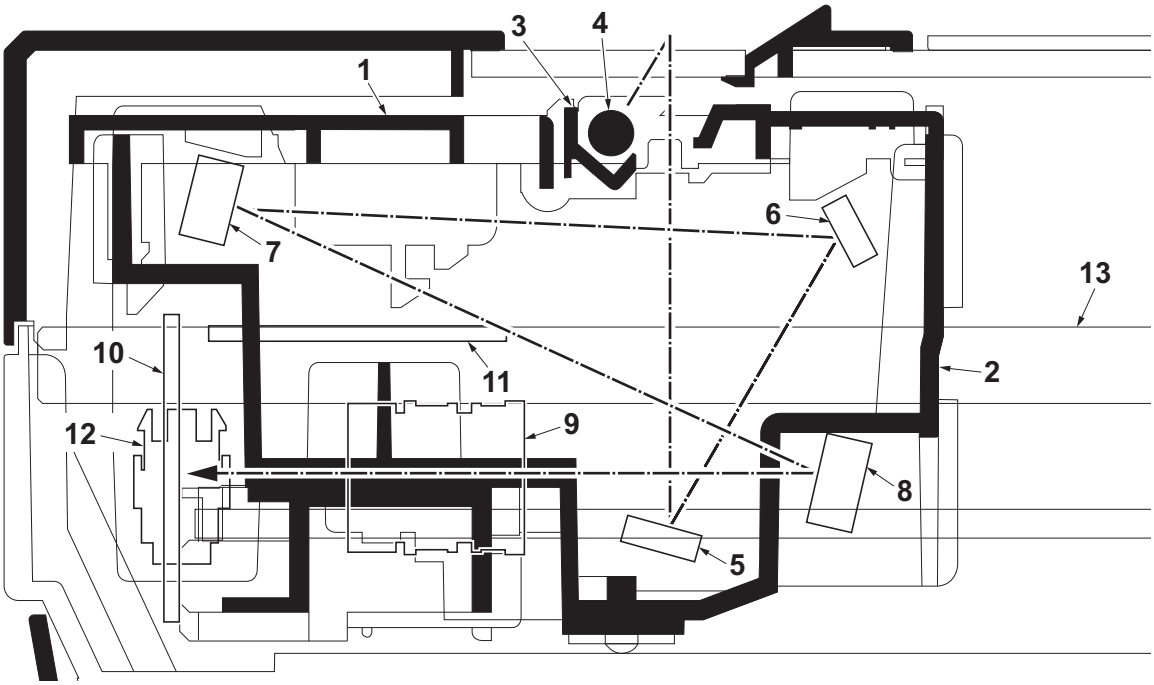

Figure 2-1-11 Image scanner unit (ISU)

1. Lamp mount
2. ISU housing
3. ISU reflector
4. Transparent material
5. Mirror A
6. Mirror B
7. Mirror C
8. Mirror D
9. ISU lens
10. CCD PWB (CCDPWB)
11. LED drive PWB (LEDDRPWB)
12. Home position sensor (HPS)
13. ISU shaft

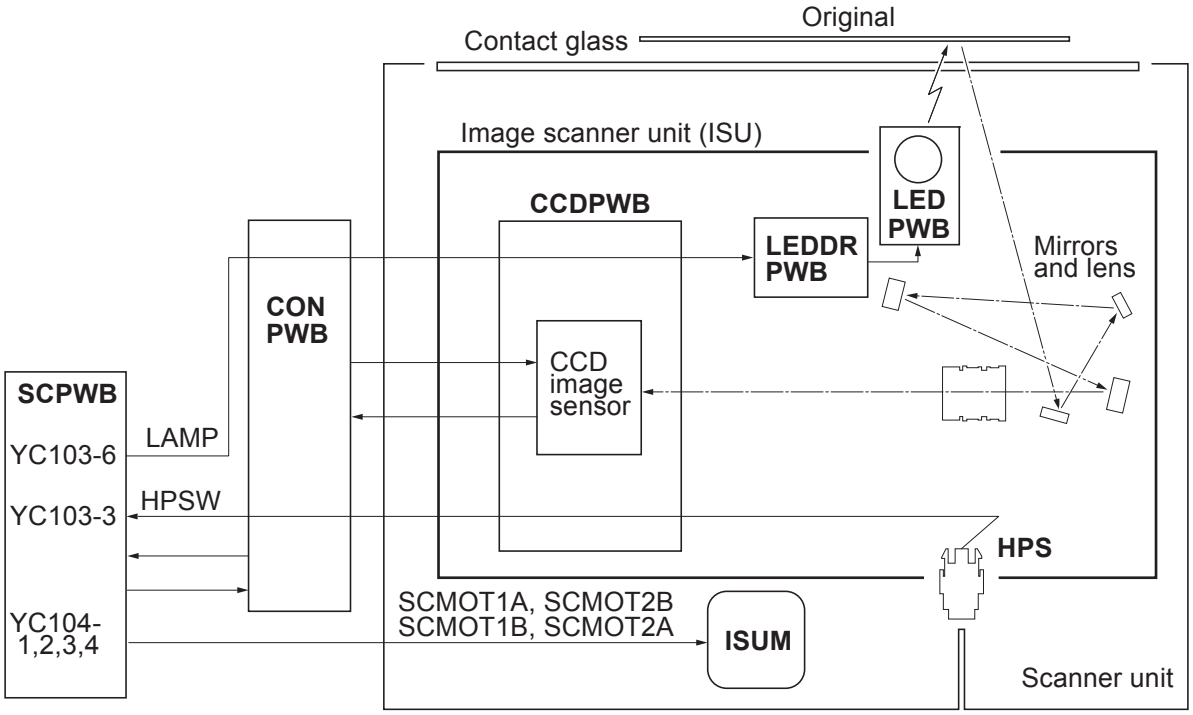

Figure 2-1-12 Scanner unit block diagram

(3) Laser scanner unit

The charged surface of the drum is then scanned by the laser beam from the laser scanner unit.
The laser beam (780 nm wavelength) beam is dispersed as the polygon motor revolves to reflect the laser beam over the drum. Various lenses and mirror are housed in the laser scanner unit, adjust the diameter of the laser beam, and focalize it at the drum surface.

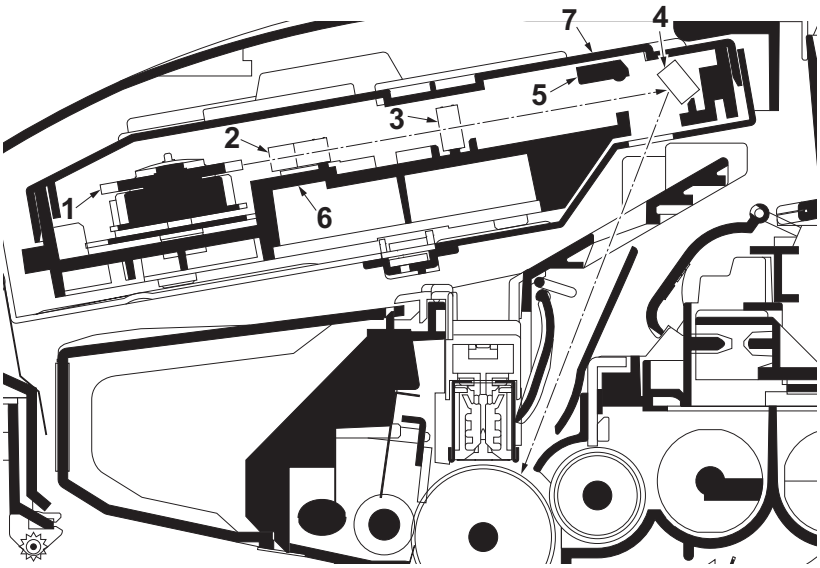

Figure 2-1-13 Laser scanner unit

1. Polygon motor (mirror)
2. F-θ lens
3. F-θ lens
4. LSU mirror
5. LSU shutter
6. LSU frame
7. LSU cover

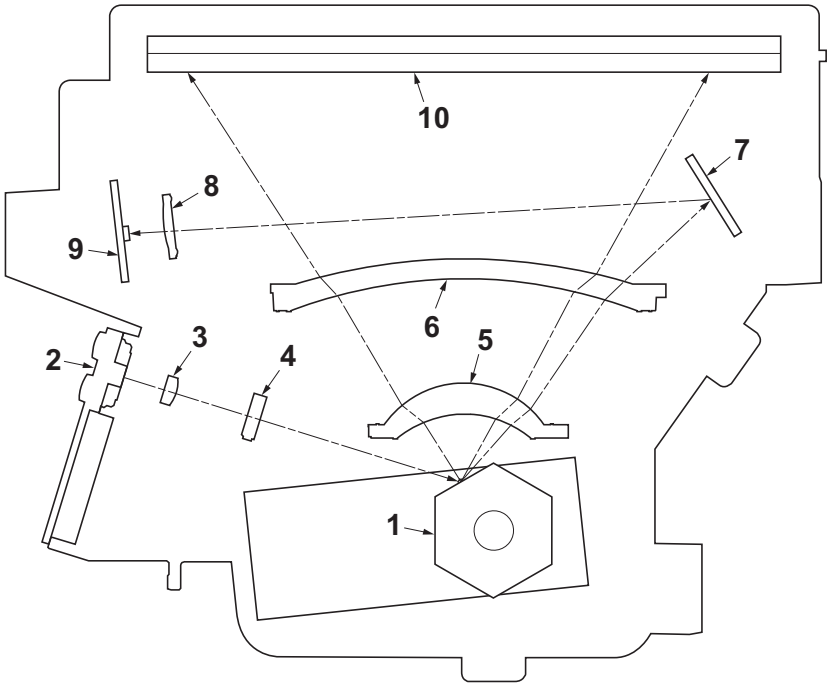

Figure 2-1-14 Laser scanner unit

1. Polygon motor (mirror)
2. Laser diode (APC PWB)
3. Collimator lens
4. Cylindrical lens
5. F-θ lens
6. F-θ lens
7. PD mirror
8. SOS lens
9. Pin photo diode sensor (PD PWB)
10. LSU mirror

2-1-4 Developing section

The latent image constituted on the drum is developed into a visible image. The developing roller contains a 3-pole (S-NS) magnet roller and an aluminum cylinder rotating around the magnet roller. Toner attracts to the magnet sleeve since it is powdery ink made of black resin bound to iron particles. Developing blade, magnetized by magnet, is positioned approximately 0.3 mm above the magnet sleeve to constitute a smooth layer of toner in accordance with the magnet sleeve revolution.

The developing roller is applied with the AC-weighted, positive DC power source. Toner on the magnet sleeve is given a positive charge. The positively charged toner is then attracted to the areas of the drum which was exposed to the laser light. (The gap between the drum and the magnet sleeve is approximately 0.32 mm.) The non-exposed areas of the drum repel the positively charged toner as these areas maintain the positive charge.
The developing roller is also AC-biased to ensure contrast in yielding by compensating the toner's attraction and repelling action during development.

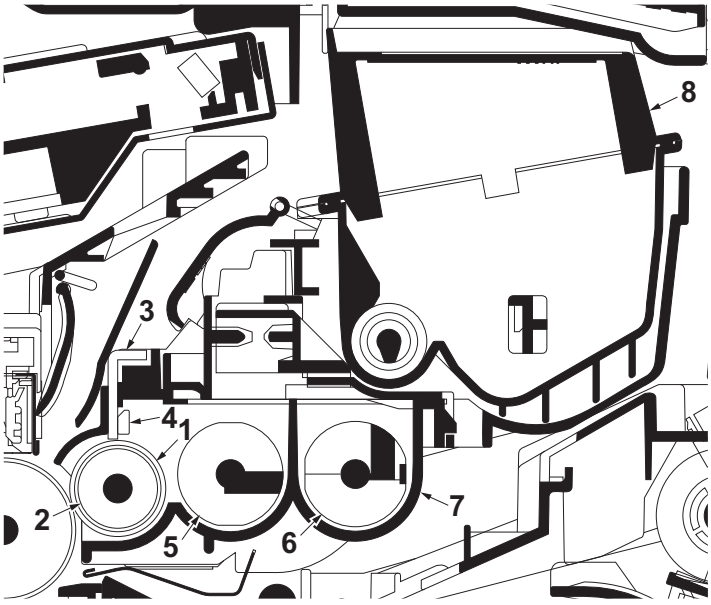

Figure 2-1-15 Developing unit and toner container

1. Magnet sleeve
2. Magnet roller
3. Developing blade
4. Blade magnet
5. DLP screw A
6. DLP screw B
7. DLP case
8. Toner container

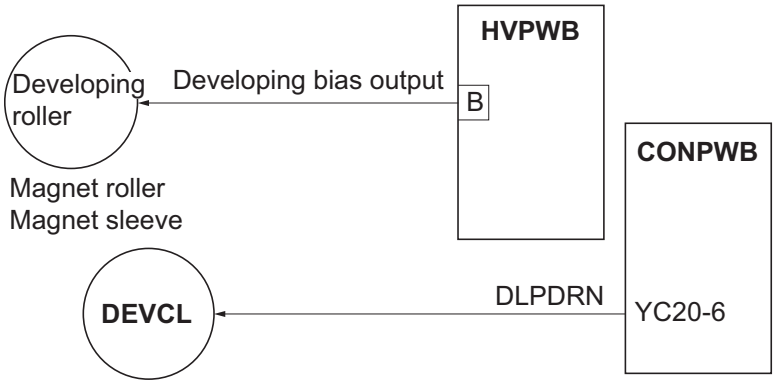

Figure 2-1-16 Developing section block diagram

2-1-5 Transfer/separation section

The transfer/separation section consists of the transfer roller, discharge electrode and paper chute guide. A high voltage generated by the high voltage PWB is applied to the transfer roller for transfer charging. Paper after transfer is separated from the drum.

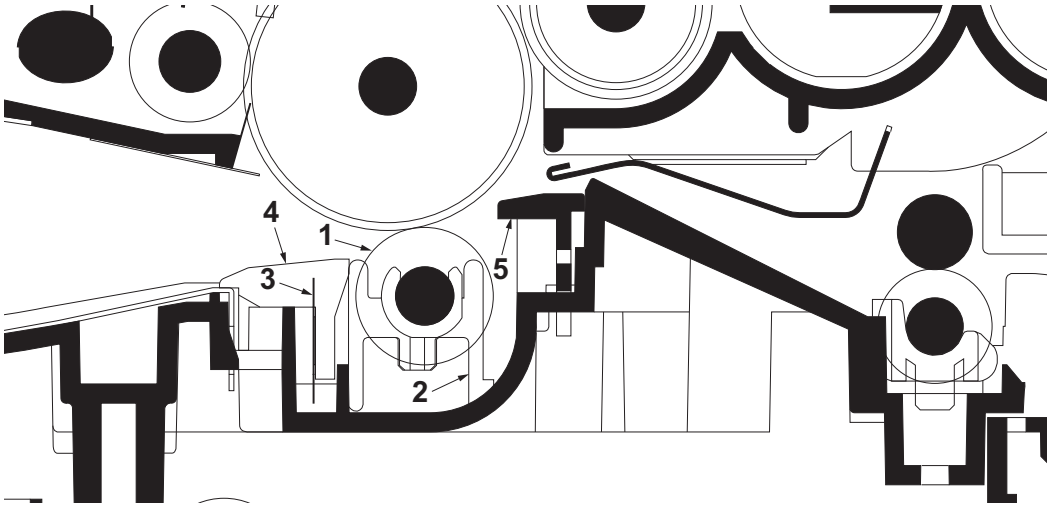

Figure 2-1-17 Transfer/separation section

1. Transfer roller
2. Transfer bushes
3. Discharge electrode
4. DC brush holder
5. Paper chute guide

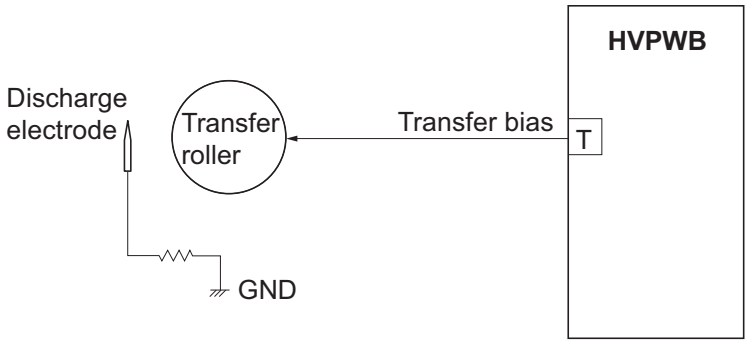

Figure 2-1-18 Transfer/separation section block diagram

2-1-6 Cleaning section

After the transferring process, the drum needs to be physically cleaned of toner which is residual after the development
process. The cleaning blade is constantly pressed against the drum and scrapes the residual toner off to the sweep roller.
The waste toner is collected at the output end of the sweep roller and sent back to the toner container, into the waste toner
reservoir.
After the drum is physically cleaned, it then must be cleaned to the electrically neutral state. This is necessary to erase any
residual positive charge, ready to accept the uniform charge for the next print process. The residual charge is canceled by
exposing the drum to the light emitted from the cleaning lamp (PWB). This lowers the electrical conductivity of the drum surface making the residual charge on the drum surface escape to the ground.

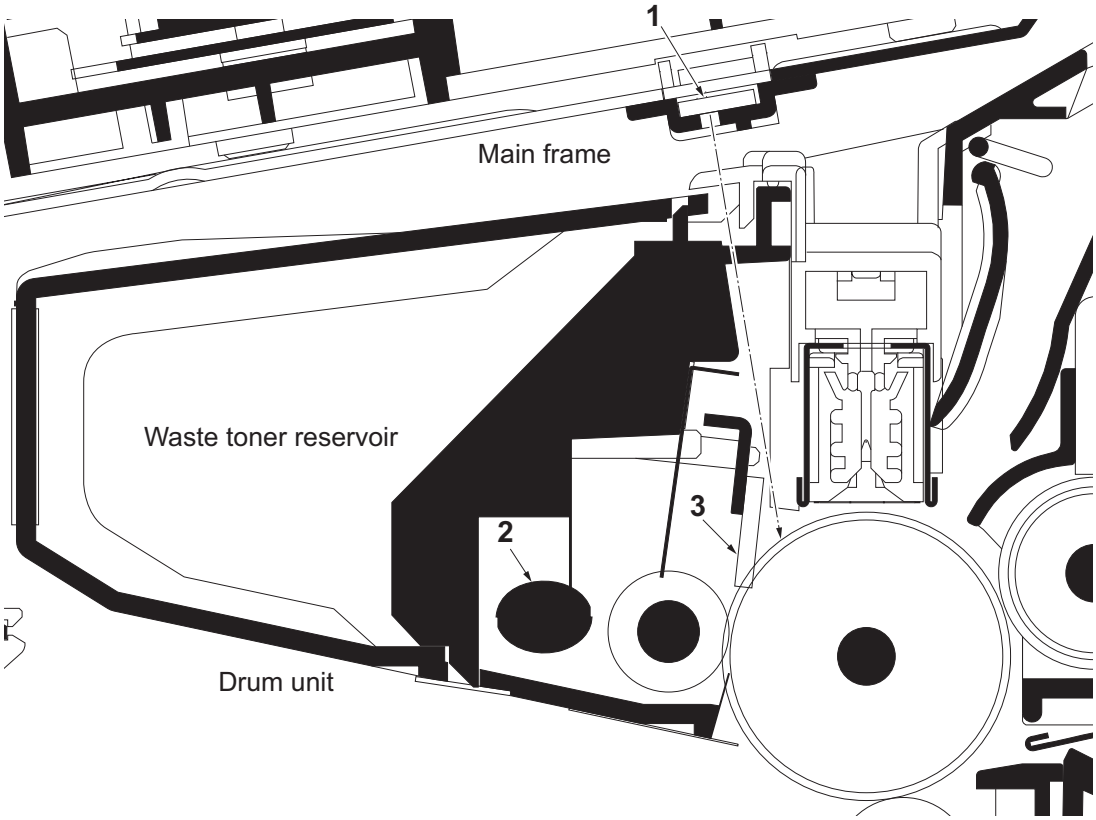

Figure 2-1-19 Cleaning section

1. Cleaning lamp (PWB)
2. Sweep roller
3. Cleaning blade

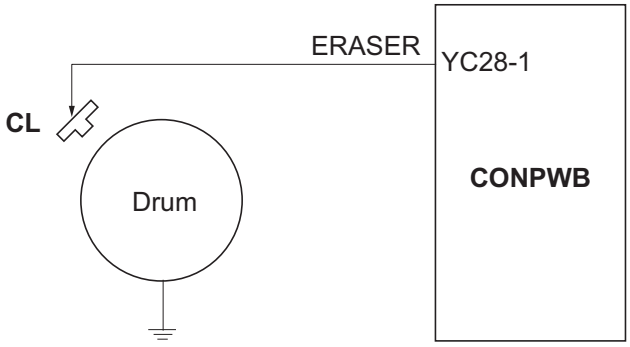

Figure 2-1-20 Cleaning section block diagram

2-1-7 Fuser section

The toner on the paper is molten and pressed into the paper as it passes between the heat roller and the press roller in the fuser unit. The heat roller has a heater inside which continuously turns on and off by the fuser thermistor to maintain the constant temperature onto the heat roller surface. The heat roller is resin coated by florin to prevent toner from accumulating on the roller after a long run. Care must be taken while handling the heat roller not to scratch the roller surface as doing so may result in print problems. Fuser temperature is optimized to the paper type. The heat roller has four separators (claws) which are continuously in contact with its surface. These separators (claws) prevent the paper on which toner has been fused from being wound around the heat roller causing paper jam. The press roller is made of the heat-resistant silicon rubber. This roller is used to strongly press the paper towards the heat roller by means of press springs. The temperature of the heat roller is constantly monitored by the control PWB using the fuser thermistor. Should the temperature of the heat roller exceed the predetermined value, the fuser thermal cutout is activated to effectively disconnect the heater from power.

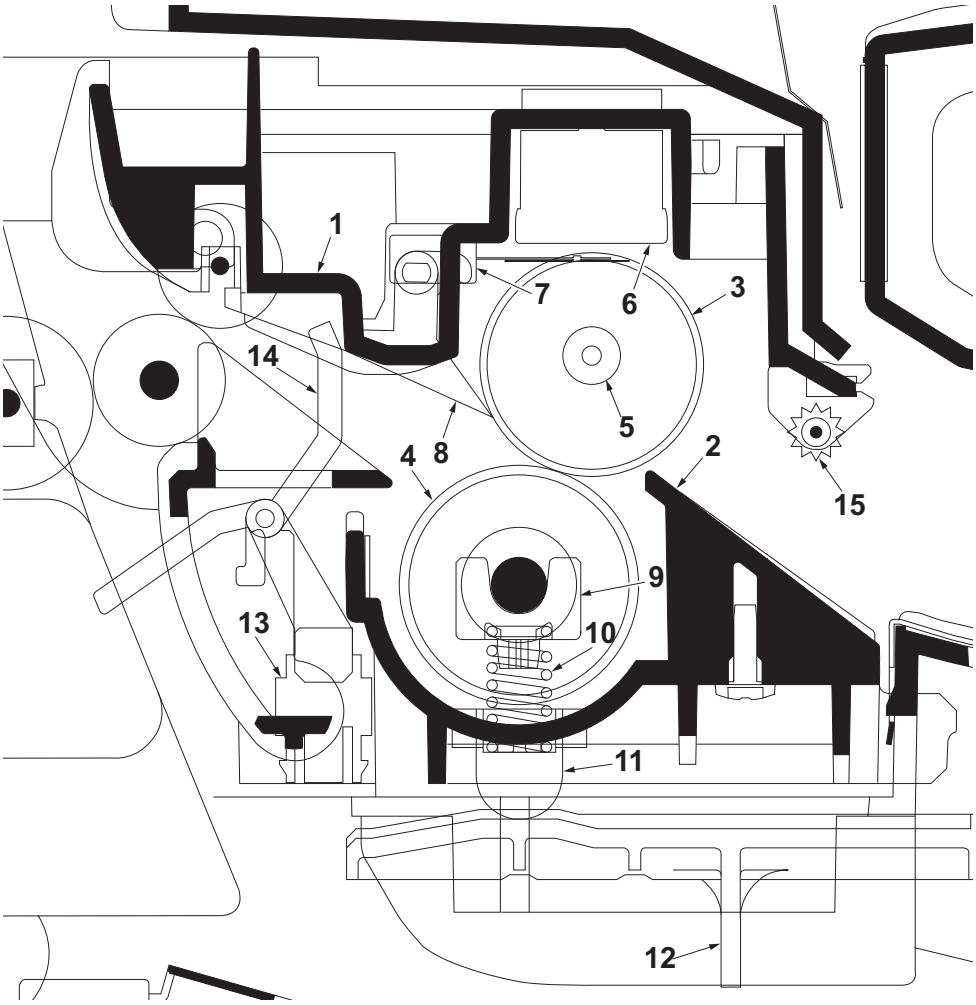

Figure 2-1-21 Fuser unit

1. Upper fuser frame
2. Lower fuser frame
3. Heat roller
4. Press roller
5. Fuser heater
6. Fuser thermostat
7. Fuser thermistor
8. Separators
9. Fuser bushes
10. Press springs
11. Press spring holders
12. Fuser lever L (R)
13. Exit sensor
14. Actuator (exit sensor)
15. Fuser guide pulley

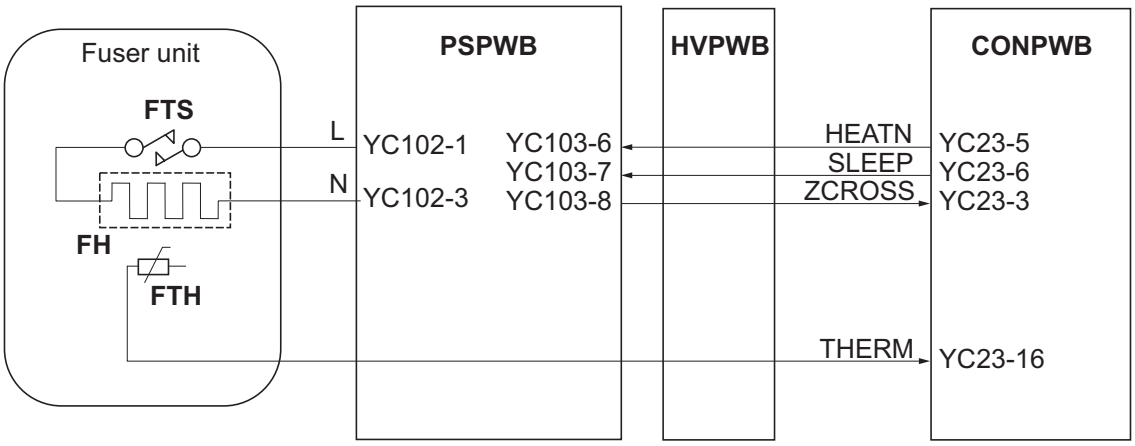

Figure 2-1-22 Fuser unit block diagram

2-1-8 Paper exit section

The paper exit section transports the paper which passed the fuser unit towards the top tray. The paper which passed through the fuser unit turns on the actuator (exit sensor) in the fuser unit, and is led by the guide comprised of the rear cover, frame and the FD cover guide, finally reaching the upper FD roller. The paper is delivered to the top tray by the rotation of the upper FD roller.

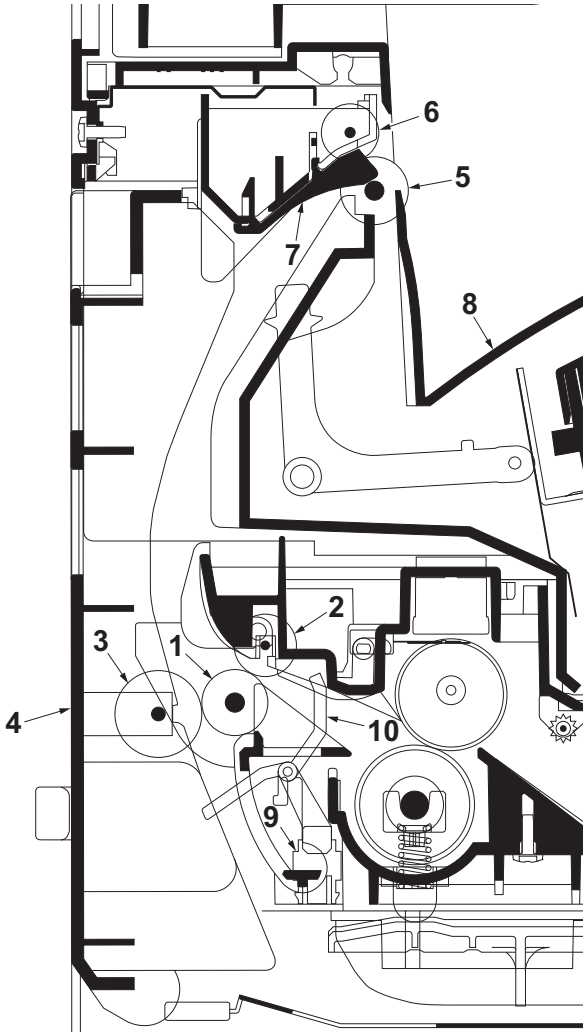

Figure 2-1-23 Paper exit section

1. Exit roller
2. Fuser exit pulley
3. Middle pulley
4. Rear cover
5. Upper FD roller
6. Exit pulley
7. FD cover
8. Top tray
9. Exit sensor
10. Actuator (exit sensor)

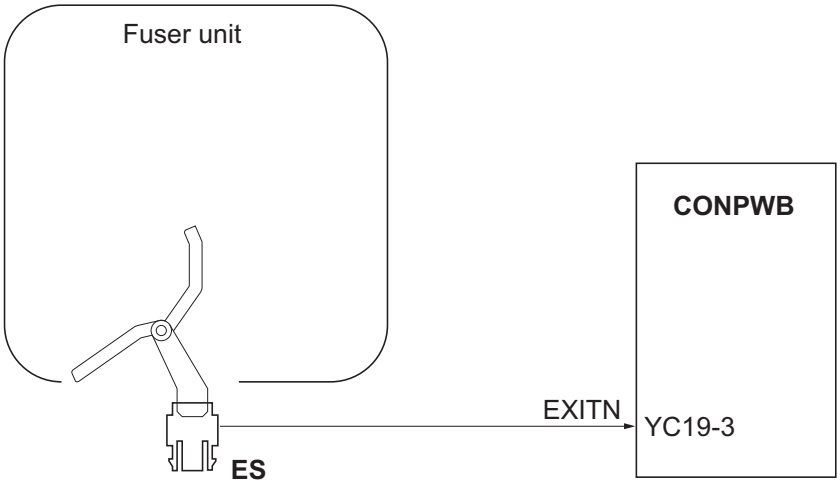

Figure 2-1-24 Paper exit section block diagram

2-1-9 Duplex/conveying section

The duplex/conveying section consists of conveying path which sends the paper sent from the exit section to the paper feed/conveying section when duplex printing.

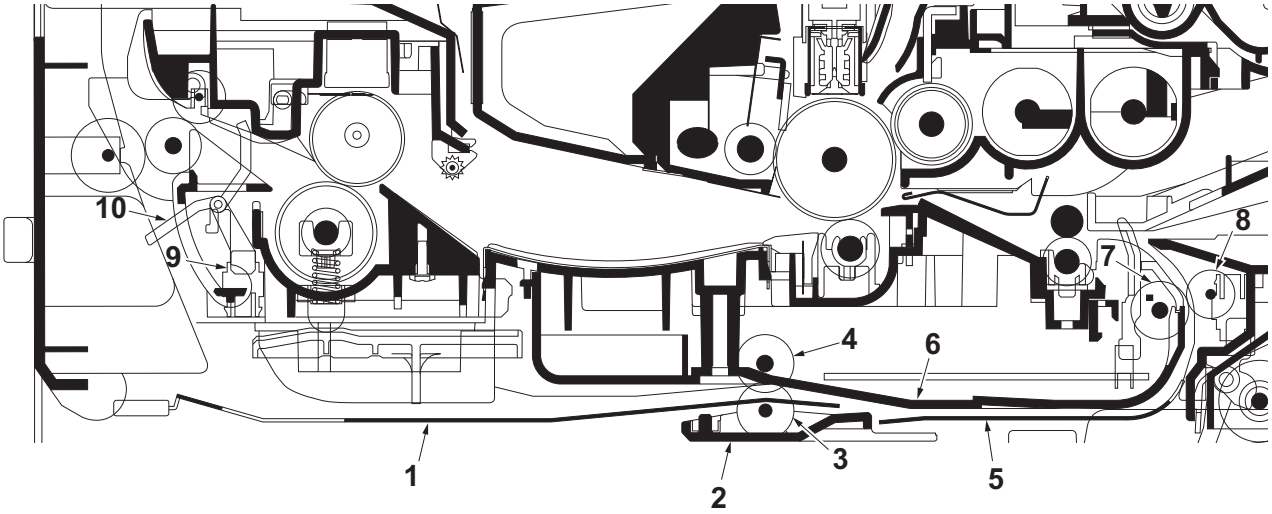

Figure 2-1-25 Duplex/conveying section

1. DU cover B
2. DU holder
3. Middle pulley B
4. DU roller
5. DU cover A
6. Lower base cover
7. Feed roller
8. Feed pulley
9. Exit sensor
10. Actuator (exit sensor)

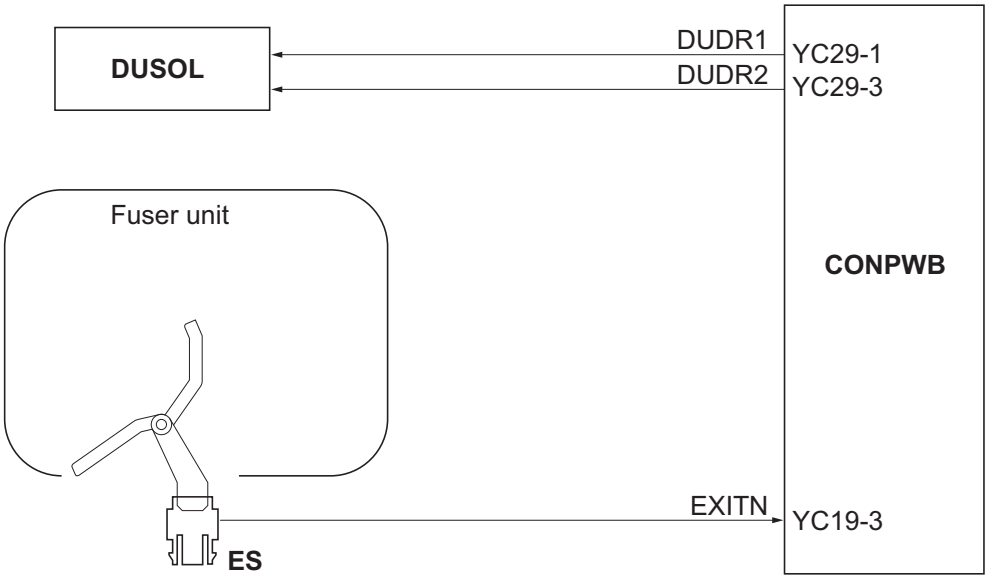

Figure 2-1-26 Duplex/paper conveying section block diagram

2-1-10 Document processor

(1) Original feed section

The original feed section consists of the parts shown in figure. An original placed on the original table is conveyed to the original conveying section. Original is fed by the rotation of the DP forwarding pulley and DP feed pulley.

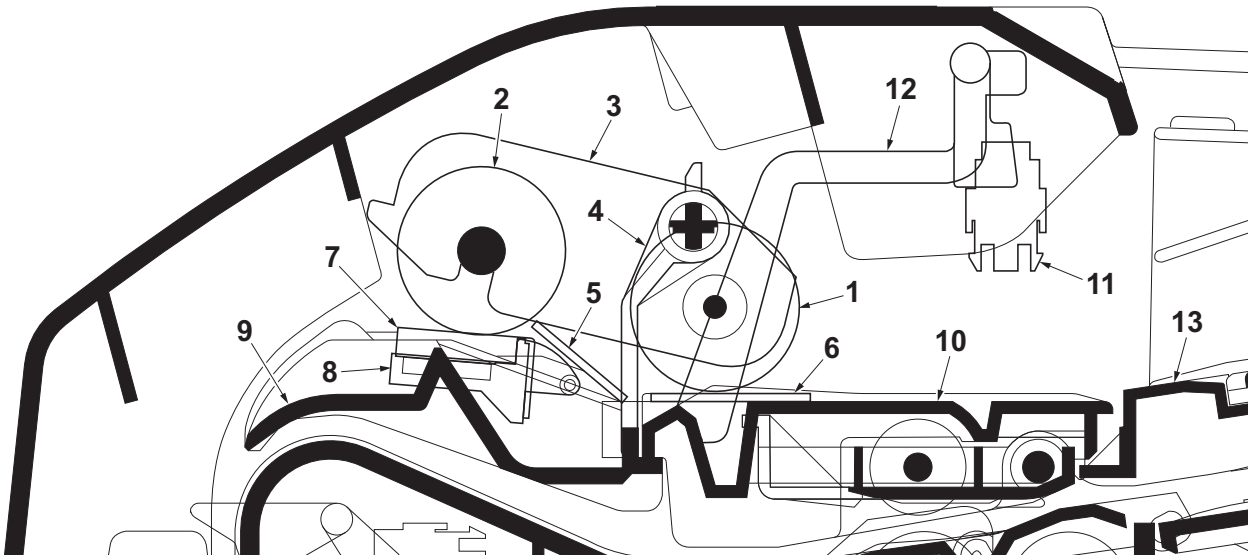

Figure 2-1-27 Original feed section

1. DP forwarding pulley
2. DP feed pulley
3. LF holder
4. PF stopper
5. Front separation pad
6. LF friction plate
7. DP separation pad
8. Separation mount
9. Upper guide
10. Switchback guide
11. DP original sensor (DPOS)
12. Actuator (DP original sensor)
13. Original table

]

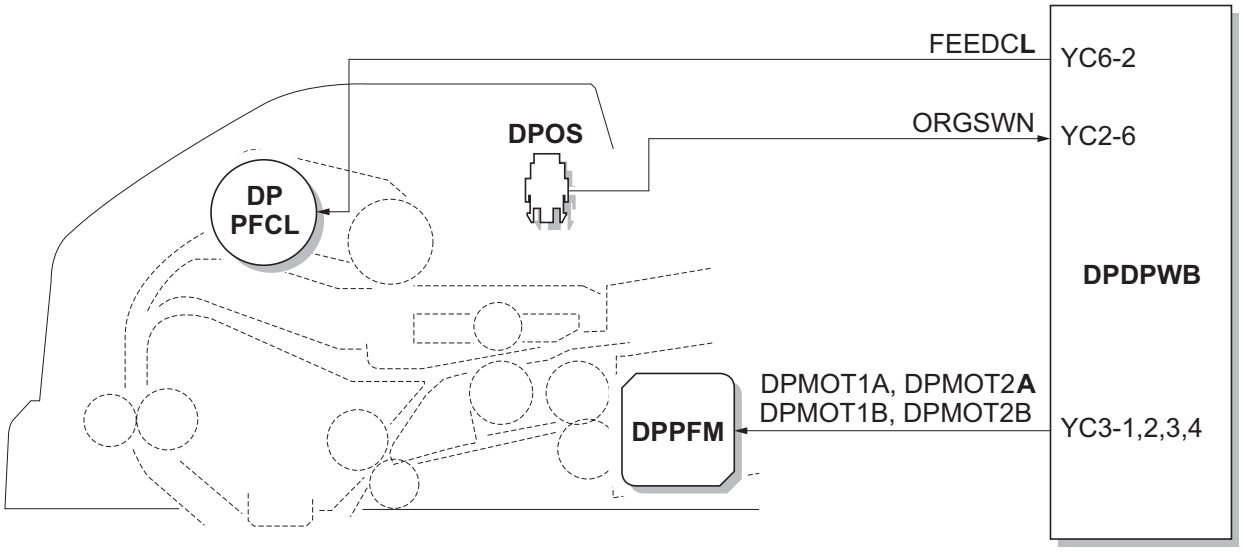

Figure 2-1-28 Original feed section block diagram

(2) Original conveying section

The original conveying section consists of the parts shown in figure. A conveyed original is scanned by the optical section (CCD) of main machine when it passes through the DP contact glass of main machine.

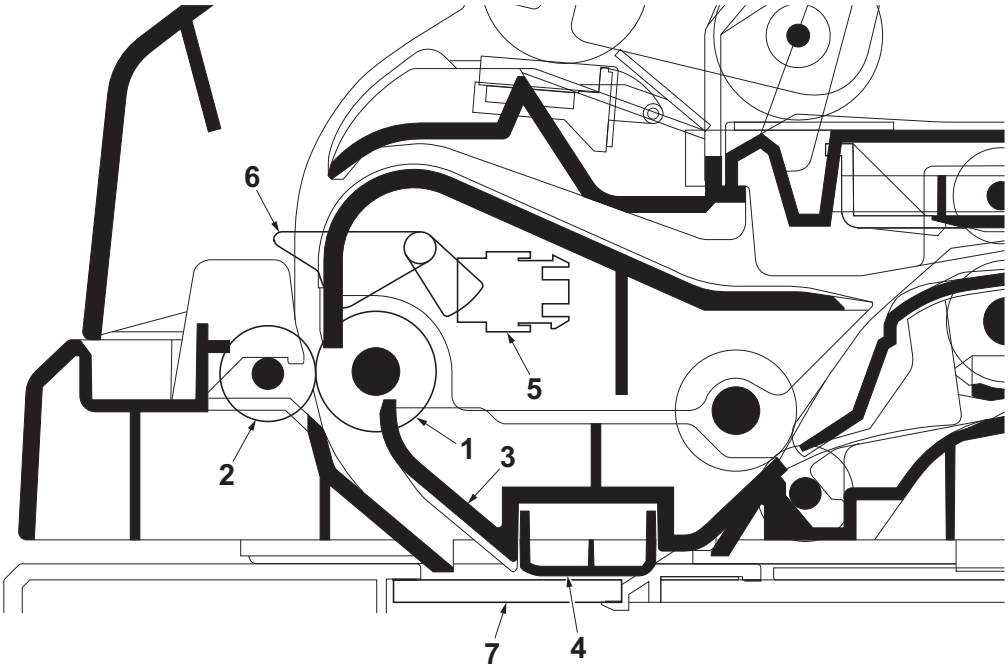

Figure 2-1-29 Original conveying section

1. Conveying roller A
2. Conveying pulley
3. Conveying bottom
4. Reading guide
5. DP timing sensor (DPTS)
6. Actuator (DP timing sensor)
7. DP contact glass

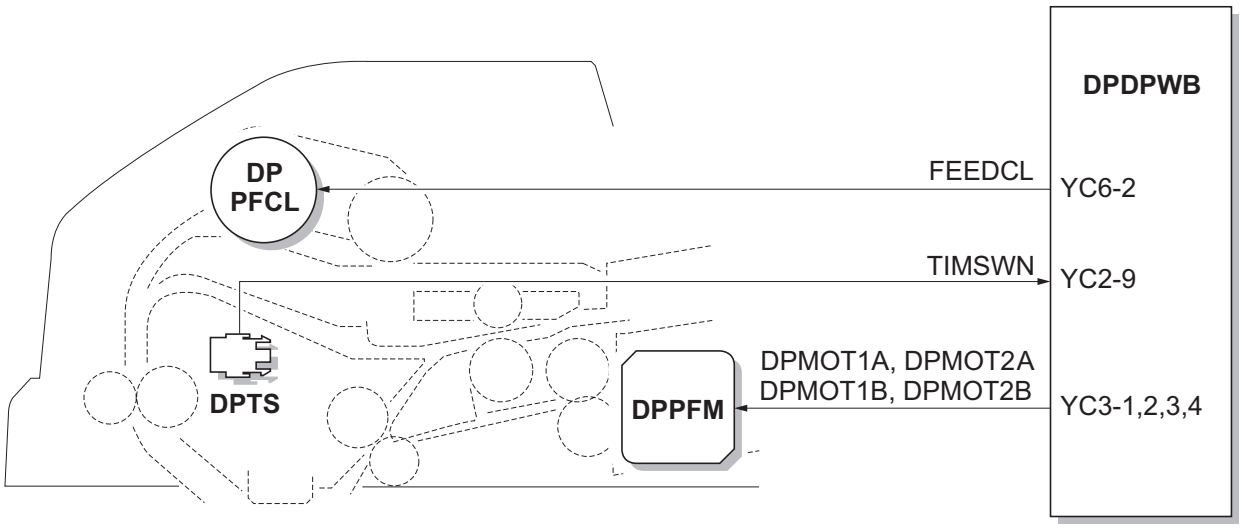

Figure 2-1-30 Original conveying section block diagram

(3) Original switchback/eject sections

The original switchback/eject sections consists of the parts shown in figure. An original of which scanning is complete is ejected to the original eject table by the eject roller. In the case of duplex switchback scanning, an original is conveyed temporarily to the switchback tray and conveyed again to the original conveying section by the switchback roller.

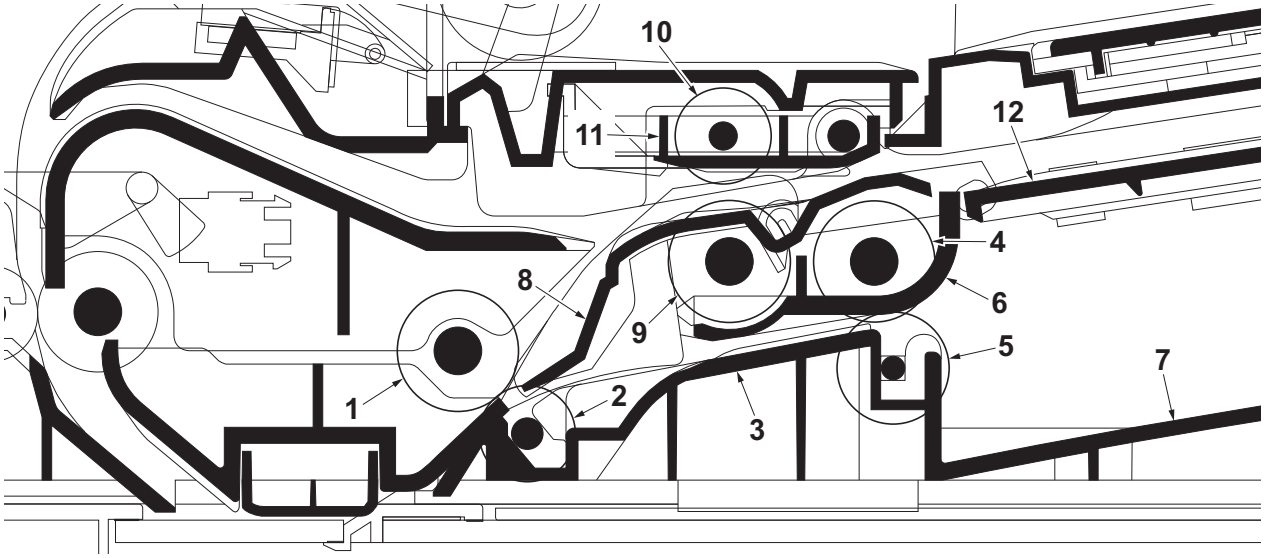

Figure 2-1-31 Original switchback/eject sections

1. Conveying roller B
2. Conveying pulley
3. DP base
4. Eject roller
5. Eject pulley
6. PF housing
7. Original eject table
8. Switchback guide
9. Switchback roller
10. Switchback pulley
11. Switchback pulley mount
12. Switchback tray

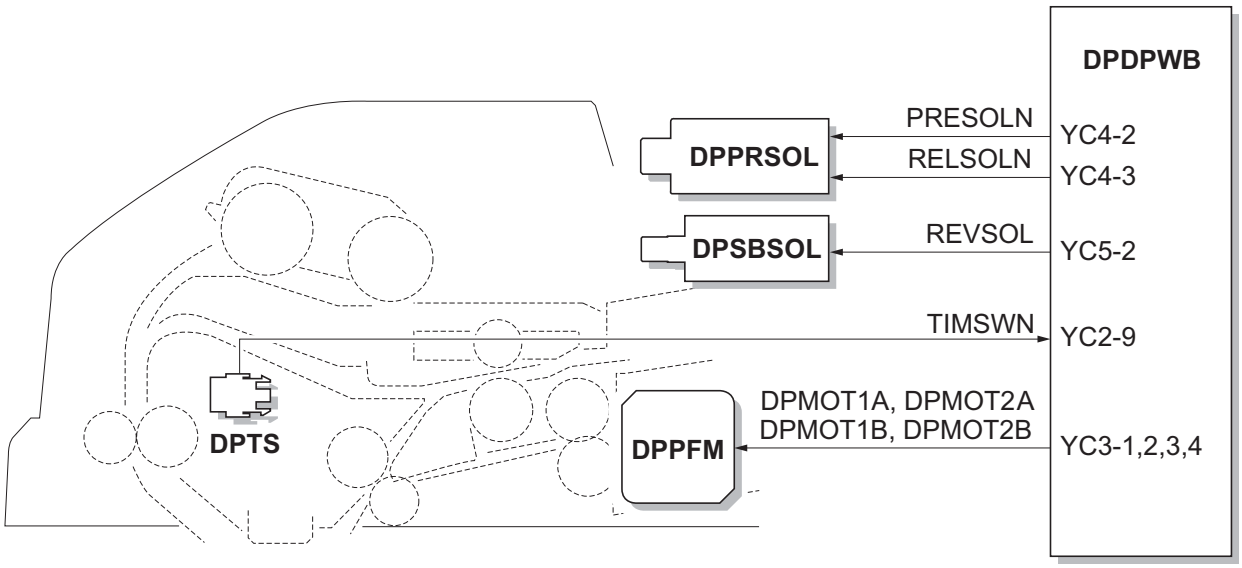

Figure 2-1-32 Original switchback/eject sections block diagram

This page is intentionally left blank.

2-2-1 Electrical parts layout

(1) PWBs

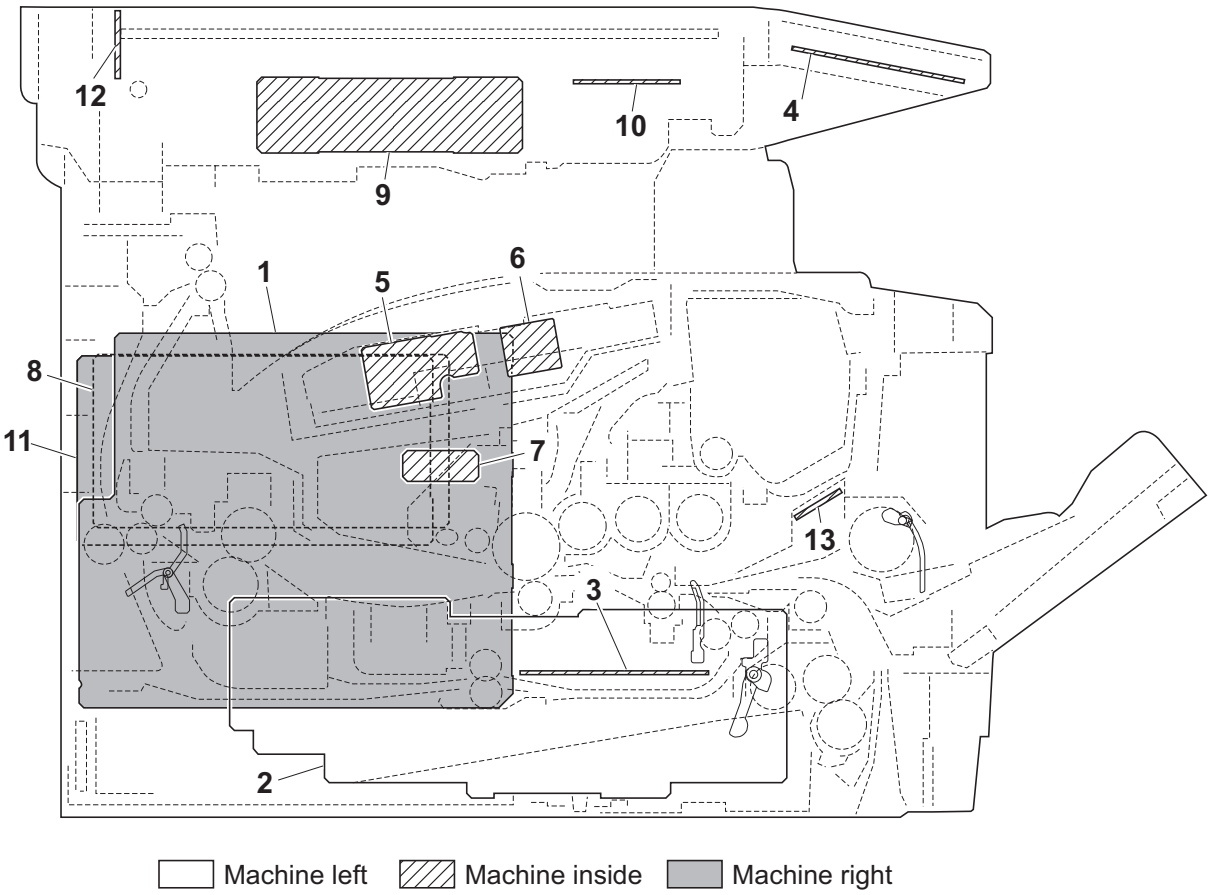

Figure 2-2-1 PWBs

1. Control PWB (CONPWB)..... Main controller: Controls the software such as the print data processing and provides the interface with computers.
   Engine: Controls machine hardware such as high voltage/bias output control, paper conveying system control, and fuser temperature control, etc.
2. Power source PWB (PSPWB) ..... After full-wave rectification of AC power source input, switching for converting to 24 V DC for output. Controls the Fuser heater.
3. High voltage PWB (HVPWB) ..... Generates main charging, developing bias and transfer bias.
4. Operation panel PWB (OPPWB) ..... Consists the LCD, LED indicators and key switches.
5. APC PWB (APCPWB) ..... Generates and controls the laser beam.
6. PD PWB (PDPWB) ..... Controls horizontal synchronizing timing of laser beam.
7. Zener PWB (ZEPWB) ..... Adjusts the drum surface potential.
8. Scanner PWB (SCPWB)..... Controls the scanner section.
9. CCD PWB (CCDPWB)..... Reads the image of originals.
10. LED drive PWB (LEDDRPWB) ..... Controls the exposure lamp.
11. FAX control PWB (FCPWB)..... Modulates, demodulates, compresses, decompresses and smoothes out image data, and converts resolution of image data.
12. LED PWB (LEDPWB) ..... Exposes originals.
13. RFID PWB (RFPWB)..... Reads the container information.

List of correspondences of PWB names

No.	Name used in service manual	Name used in parts list
1	Control PWB	PARTS MAIN PWB ASSY FS SP
1	Control PWB	PARTS MAIN PWB ASSY FS SP EU
2	Power source PWB	PARTS SWITCHING REGULATOR 120V SP
2	Power source PWB	PARTS SWITCHING REGULATOR 230V SP
3	High voltage PWB	HIGH VOLTAGE UNIT
4	Operation panel PWB	PARTS PANEL PWB ASSY SP
5	APC PWB	-
6	PD PWB	-
7	Zener PWB	-
8	Scanner PWB	PARTS SCANNER PWB ASSY SP
9	CCD PWB	-
10	LED drive PWB	-
11	FAX control PWB	PARTS MAIN FAX ASSY U SP
11	FAX control PWB	PARTS MAIN FAX ASSY E SP
12	LED PWB	-
13	RFID PWB (RFPWB)	PARTS PWB RFID ASSY SP

(2) Switches and sensors

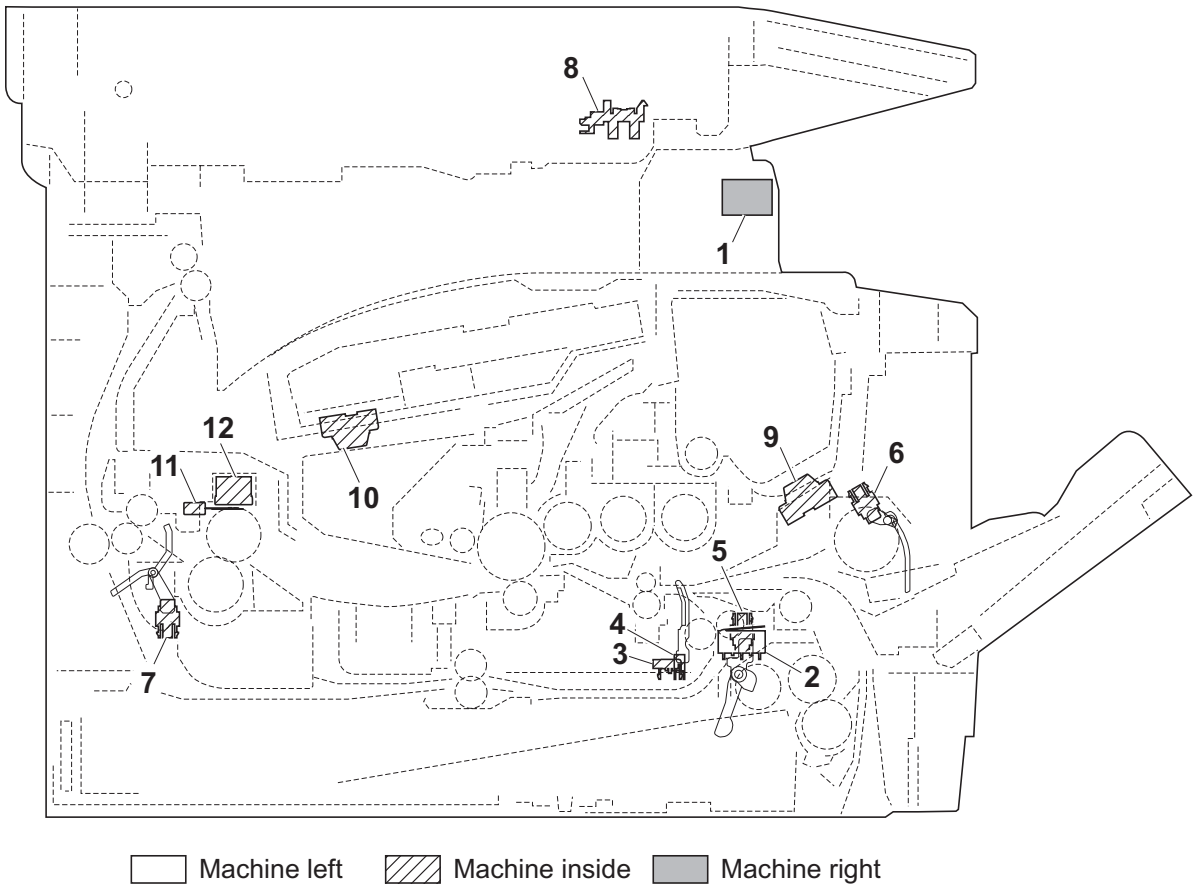

Figure 2-2-2 Switches and sensors

1. Power switch (MSW)..... Switches of main body operation.
2. Interlock switch (ILSW) ..... Shuts off 24 V DC power line when the front cover is opened.
3. Cassette switch (COCSW)..... Detects open/close cassette.
4. Registration sensor (RS)..... Detects the timing of primary paper feed.
5. Paper sensor (PS) ..... Detects the presence of paper in the cassette.
6. MP paper sensor (MPPS) ..... Detects the presence of paper on the MP tray.
7. Exit sensor (ES) ..... Detects paper jam in the fuser or duplex conveying section.
8. Home position sensor (HPS) ..... Detects the ISU in the home position.
9. Toner sensor (TS) ..... Detects the quantity of toner in a toner container.
10. Waste toner sensor (WTS)..... Detects when the waste toner reservoir (Drum unit) is full.
11. Fuser thermistor (FTH) ..... Measures the heat roller temperature.
12. Fuser thermostat (FTS)..... Shuts off the power source to the Fuser heater when the heat roller reaches extremely high temperature.

(3) Other electrical components

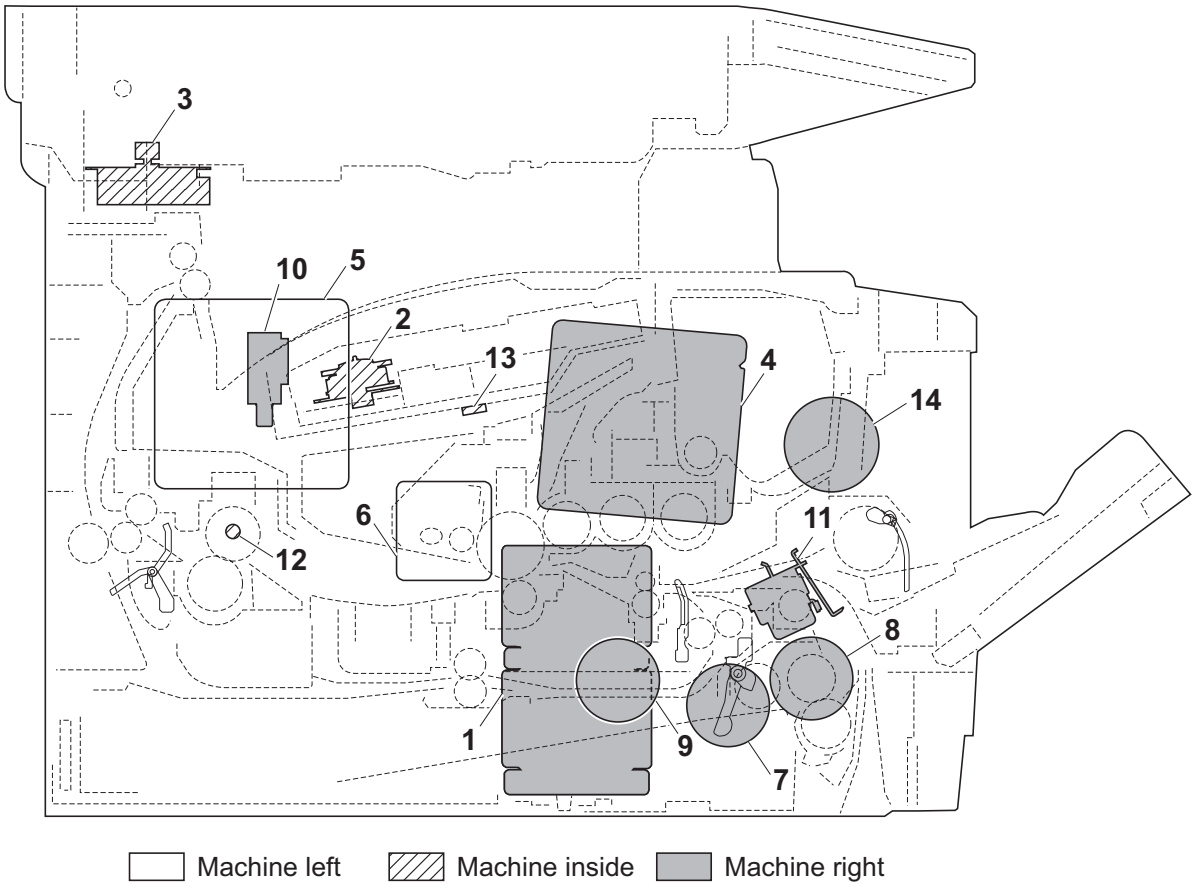

Figure 2-2-3 Other electrical components

1. Main motor (MM)..... Drives the paper feed/conveying section and fuser unit.
2. Polygon motor (PM)..... Drives the polygon mirror.
3. ISU motor (ISUM) ..... Drives the ISU.
4. Right cooling fan motor (RFM ..... Cools the interior of machine.
5. Left cooling fan motor (LFM)..... Cools the interior of machine.
6. Power source fan motor (PSFM) ..... Cools the interior of machine.
7. Registration clutch (RCL)..... Controls the secondary paper feed.
8. Paper feed clutch (PFCL) ..... Controls the paper cassette paper feed.
9. Developing clutch (DEVCL) ..... Controls the toner feed.
10. Duplex solenoid (DUCL) ..... Controls the paper conveying at the duplex conveying section.
11. MP paper feed solenoid (MPPFSOL) ... Controls the MPF bottom plate of the MP tray.
12. Fuser heater (FH) ..... Heats the heat roller.
13. Cleaning lamp (CL)..... Eliminates the residual electrostatic charge on the drum.
14. Speaker (SP..... Outputs buzzer, monitoring and speaker sounds.

(4) Document processor

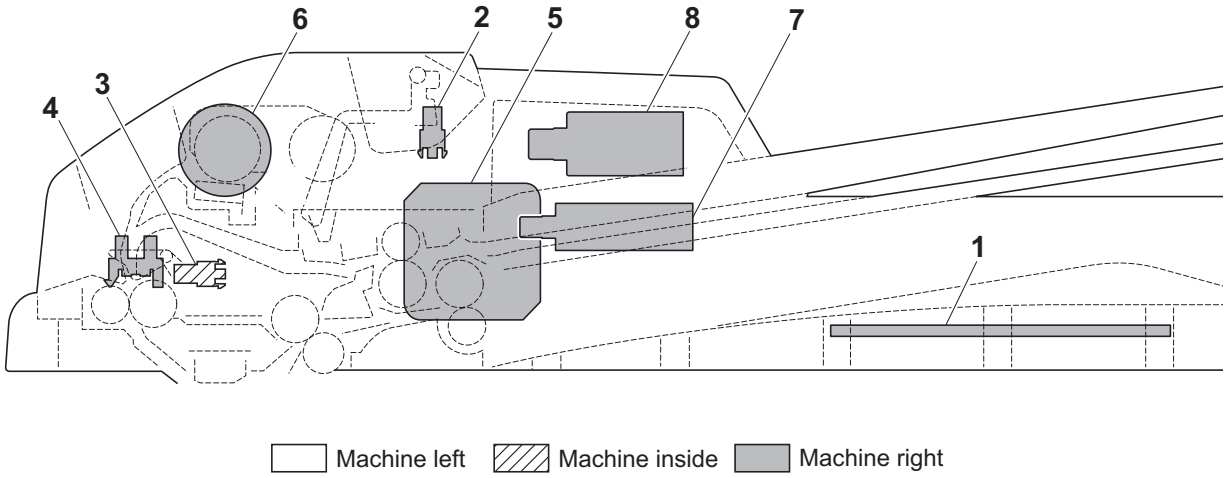

Figure 2-2-4 Document processor

1. DP drive PWB (DPDPWB)..... Consists the solenoids and clutch driver circuit and wiring relay circuit.
2. DP original sensor (DPOS)..... Detects the presence of an original.
3. DP timing sensor (DPTS)..... Detects the original scanning timing.
4. DP open/close sensor (DPOCS)..... Detects the opening/closing of the DP.
5. DP paper feed motor (DPPFM)..... Drives the original feed section.
6. DP paper feed clutch (DPPFCL)..... Controls the drive of the forwarding pulley and feed pulley.
7. DP switchback solenoid (DPSBSOL).... Operates the switchback guide.
8. DP pressure solenoid (DPPRSOL)..... Operates the switchback pulley.

List of correspondences of PWB names

No.	Name used in service manual	Name used in parts list
1	DP drive PWB	PARTS DRIVER PWB ASSY SP

This page is intentionally left blank.

2-3-1 Power source PWB

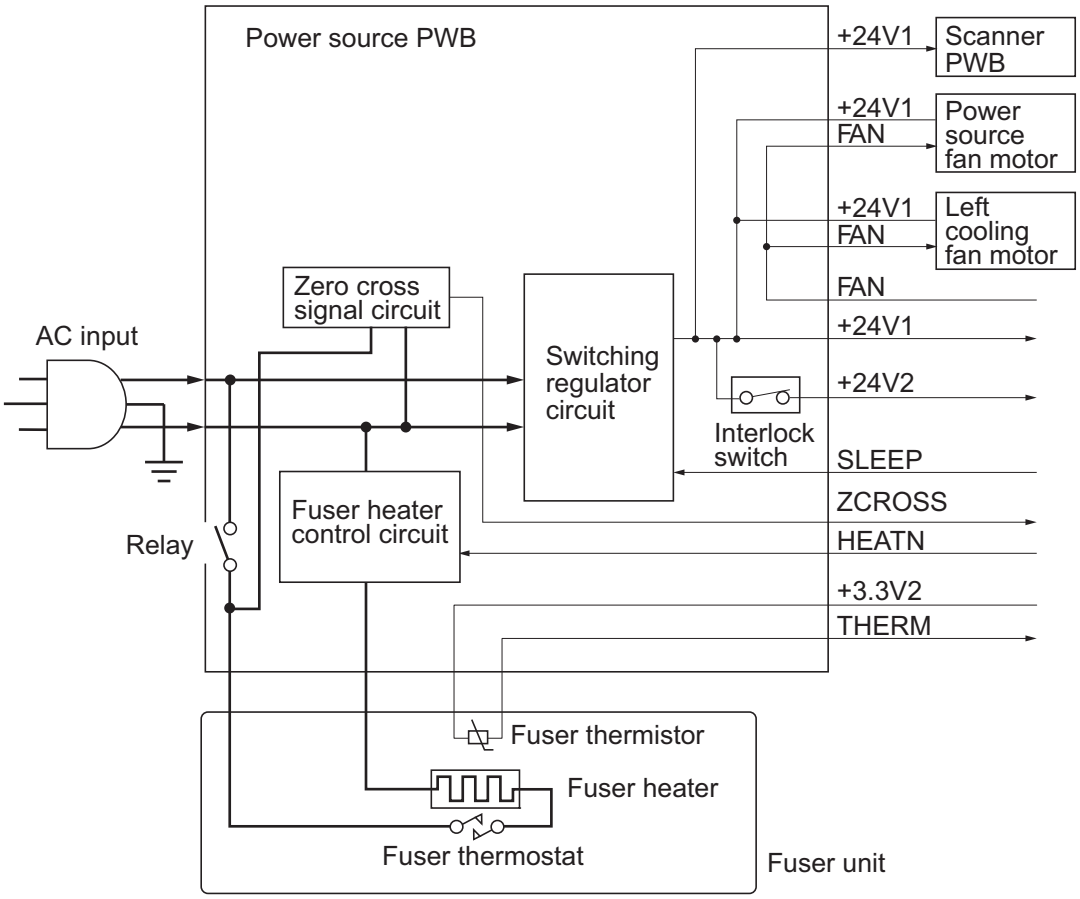

Figure 2-3-1 Power source PWB block diagram

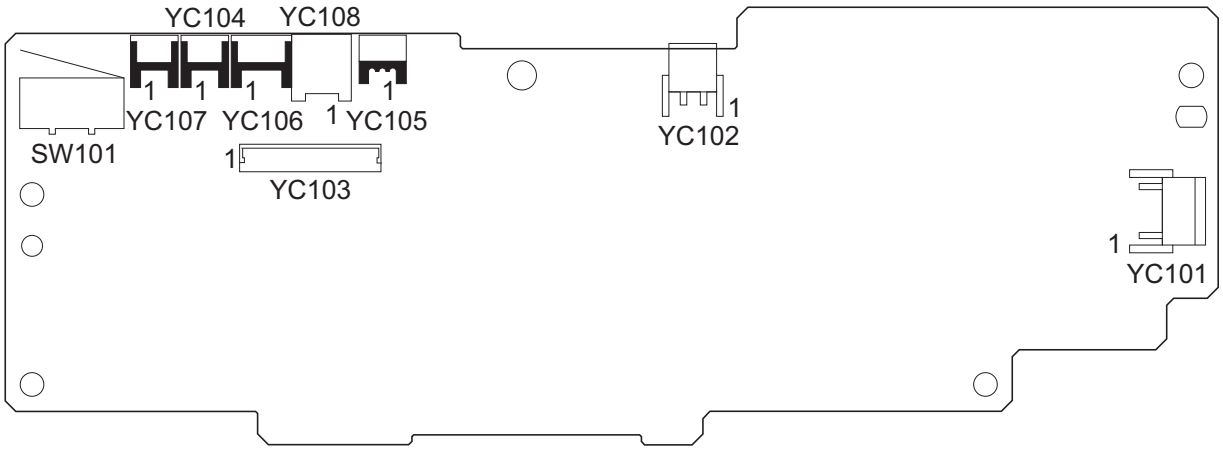

Figure 2-3-2 Power source PWB silk-screen diagram

Connector	Pin	Signal	I/O	Voltage	Description
YC101	1	NEUTRAL	I	120 V AC 220 - 240 V AC	AC power input
Connected to the AC inlet	2	LIVE	I	120 V AC 220 - 240 V AC	AC power input
YC102	1	LIVE	O	120 V AC 220 - 240 V AC	Fuser heater output
Connected to the Fuser heater	2	NEUTRAL	O	120 V AC 220 - 240 V AC	Fuser heater output
YC103	1	+24V1	O	24 V DC	24 V DC power source
Connected to the high voltage PWB	2	SGND	-	-	Ground
	3	FAN	I	0/24 V DC	Left cooling fan motor: On/Off
	4	THERM	O	Analog	Fuser thermistor detection voltage
	5	+3.3V1	I	3.3 V DC	3.3 V DC power source
	6	HEATN	I	0/3.3 V DC	Fuser heater: On/Off
	7	SLEEP	I	0/3.3 V DC	Sleep mode signal: On/Off
	8	ZCROSS	O	0/3.3 V DC (pulse)	Zero cross signal
	9	+24V2	O	24 V DC	24 V DC power source (via interlock switch)
	10	+24V2	O	24 V DC	24 V DC power source (via interlock switch)
	11	PGND	-	-	Ground
	12	PGND	-	-	Ground
YC104	1	+24V1	O	24 V DC	24 V DC power source
Connected to the left cooling fan motor	2	FAN	O	0/24 V DC	Left cooling fan motor: On/Off
YC105	1	+3.3V1	O	3.3 V DC	3.3 V DC power source
Connected to the fuser thermistor	2	N.C.	-	-	Not used
	3	THERM	I	Analog	Fuser thermistor detection voltage
YC106	1	+24V1	O	24 V DC	24 V DC power source
Connected to the scanner PWB	2	N.C.	-	-	Not used
	3	GND	-	-	Ground

Connector	Pin	Signal	I/O	Voltage	Description
YC107	1	+24V1	O	24 V DC	24 V DC power source
Connected to the power source fan motor	2	FAN	O	0/24 V DC	Power source fan motor: On/Off
YC108	1	-	-	-	Frame ground (Control PWB)
Connected to the ground terminals	2	-	-	-	Frame ground (Frame)
	3	-	-	-	Frame ground (Frame)

2-3-2 Control PWB

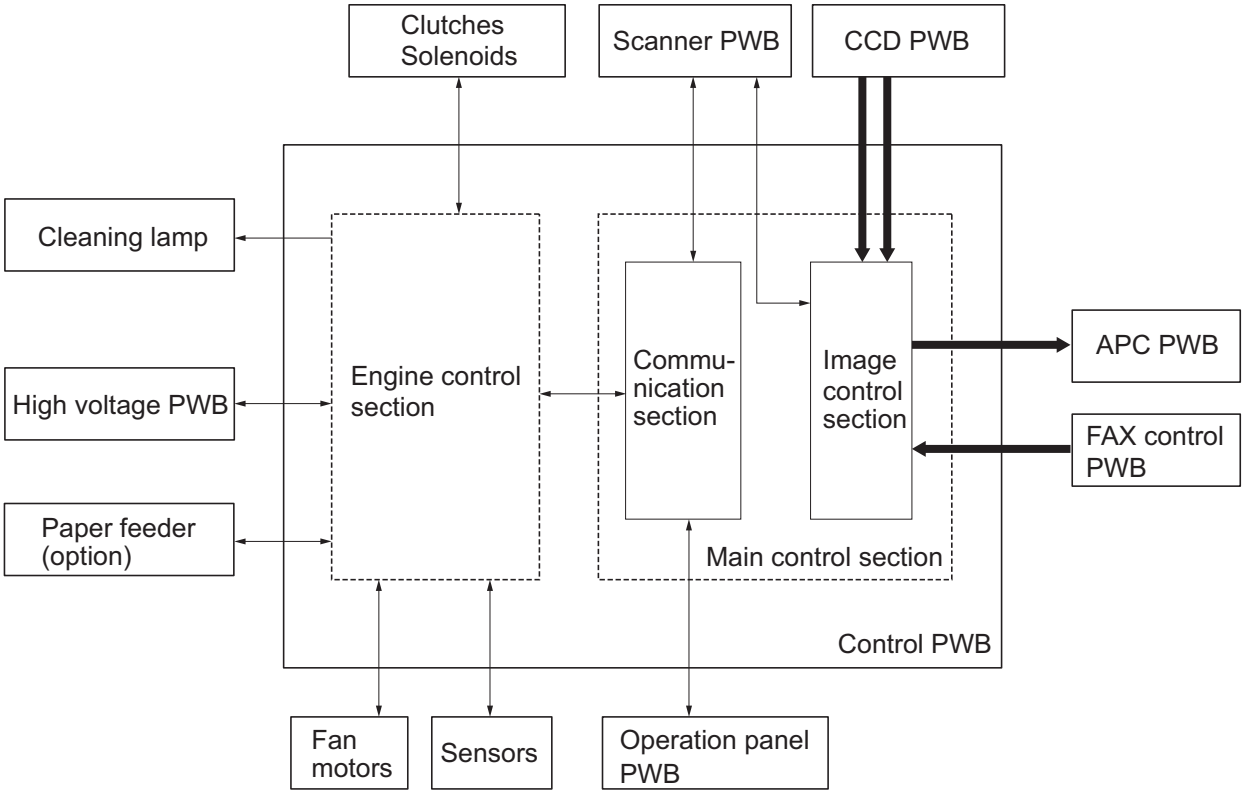

Figure 2-3-3 Control PWB block diagram

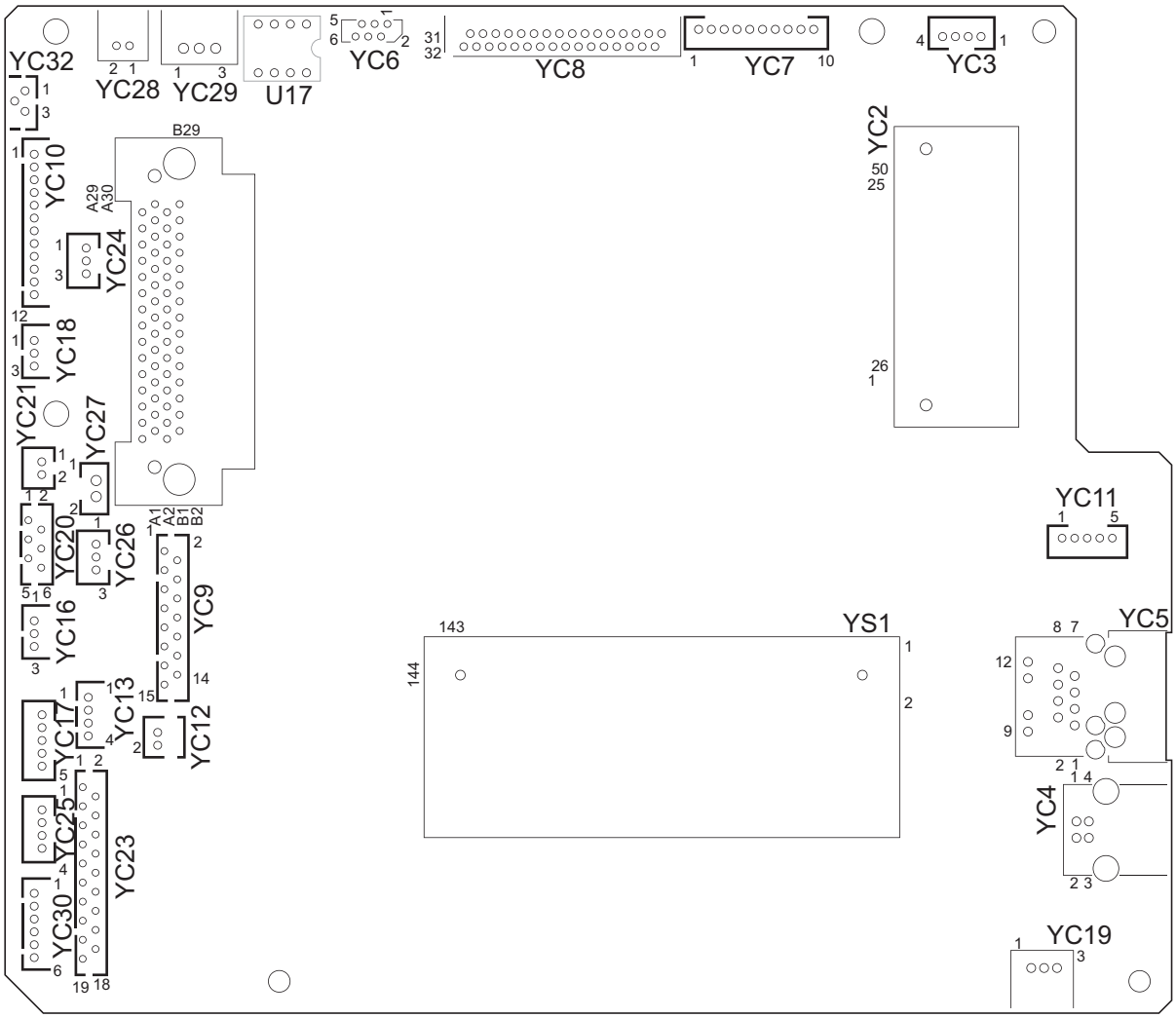

Figure 2-3-4 Control PWB silk-screen diagram

Connector	Pin	Signal	I/O	Voltage	Description
YC6	1	+12V	O	12 V DC	12 V DC power source
Connected to the scanner PWB	2	GND	-	-	Ground
	3	HPSW	O	0/3.3 V DC	Home position sensor: On/Off
	4	GND	-	-	Ground
	5	NC	-	-	Not used
	6	LAMP	I	0/24 V DC	Exposure lamp drive signal
YC7	1	GND	-	-	Ground
Connected to the opera-tion panel PWB	2	PANCTS	I	0/3.3 V DC (pulse)	Transmitting enable signal
	3	PANRTS	O	0/3.3 V DC (pulse)	Receiving enable signal
	4	+3.3V1	O	0/3.3 V DC	Home position sensor: On/Off
	5	PANRXD	I	0/3.3 V DC (pulse)	Operation panel PWB receiving data
	6	PANTXD	O	0/3.3 V DC (pulse)	Operation panel PWB transmitting data
	7	FPRSTN	O	3.3/0 V DC	Operation panel PWB reset signal
	8	GND	-	-	Ground
	9	POWERKEY	I	3.3/0 V DC	Power key input signal
	10	+5V1	O	5 V DC	5 V DC power source
YC8	1	LAMP	O	0/24 V DC	Exposure lamp drive signal
Connected to the CCD PWB	2	NC	-	-	Not used
	3	GND	-	-	Ground
	4	GND	-	-	Ground
	5	HPSW	I	0/3.3 V DC	Home position sensor: On/Off
	6	+3.3V1	O	3.3 V DC	3.3 V DC power source
	7	NC	-	-	Not used
	8	CCDRSN	O	LVDS	CCD reset signal (-)
	9	CCDRSP	O	LVDS	CCD reset signal (+)
	10	NC	-	-	Not used
	11	CCDCLPP	O	LVDS	CCD reset signal (-)
	12	CCDCLPN	O	LVDS	CCD reset signal (+)
	13	NC	-	-	Not used
	14	CCDPH1N	O	LVDS	CCD shift register clock signal (-)
	15	CCDPH1P	O	LVDS	CCD shift register clock signal (+)
	16	NC	-	-	Not used
	17	CCDPH2P	O	LVDS	CCD shift register clock signal (-)
	18	CCDPH2N	O	LVDS	CCD shift register clock signal (+)
	19	NC	-	-	Not used
	20	CCDSH	O	LVDS	CCD shift gate signal (-)

Connector	Pin	Signal	I/O	Voltage	Description
YC8	21	CCDSW	O	LVDS	CCD color/BW change signal (+)
Connected to the CCD PWB	22	GND	-	-	Ground
	23	CCDDATAR	I	LVDS	CCD image output signal (Red)
	24	GND	-	-	Ground
	25	CCDDATAG	I	LVDS	CCD image output signal (Green)
	26	GND	-	-	Ground
	27	CCDDATAB	I	LVDS	CCD image output signal (Blue)
	28	GND	-	-	Ground
	29	+12V	O	12 V DC	12 V DC power source (For exposure lamp)
	30	GND	-	-	Ground
	31	+5V1	O	5 V DC	5 V DC power source
	32	+5V1	O	5 V DC	5 V DC power source
YC9	1	GND	-	-	Ground
Connected to the scanner PWB	2	+3.3V1	O	3.3 V DC	3.3 V DC power source
	3	CPUCLK	I	0/3.3 V DC (pulse)	Serial communications clock signal
	4	CPUSI	I	0/3.3 V DC (pulse)	Serial communications data input
	5	CPUSO	O	0/3.3 V DC (pulse)	Serial communications data output
	6	CPUSEL	I	0/3.3 V DC	Communications select signal
	7	CPURDY	O	0/3.3 V DC	Communications ready signal
	8	OVMONOUT	O	0/3.3 V DC	Communications ready signal
	9	PAGESET	O	0/3.3 V DC	Vertical synchronizing monitor signal
	10	SEGSO	I	0/3.3 V DC	Vertical synchronizing signal
	11	SSCKN	O	0/3.3 V DC (pulse)	Serial communications clock
	12	SEGSI	O	0/3.3 V DC (pulse)	Serial communications data input
	13	SSBSY	I	0/3.3 V DC	Impossible transmission/Completion notice signal
	14	SSDIR	I	0/3.3 V DC	Serial communications T/R switching signal
	15	SEGIR	I	0/3.3 V DC	Serial communications interruption demand signal

Connector	Pin	Signal	I/O	Voltage	Description
YC10	1	+24V3	O	24 V DC	24 V DC power source
Connected to the laser scanner unit	2	GND	-	-	Ground
	3	PLGDRN	O	0/3.3 V DC	Polygon motor: On/Off
	4	PLGRDY	I	0/3.3 V DC	Polygon motor ready signal
	5	PLGCLK	O	0/3.3 V DC (pulse)	Polygon motor clock signal
	6	PDN	I	0/3.3 V DC (pulse)	Horizontal synchronizing signal
	7	GND	-	-	Ground
	8	VDON	O	0/3.3 V DC (pulse)	Video data signal (+)
	9	VDOP	O	0/3.3 V DC (pulse)	Video data signal (-)
	10	OUTPEN	O	0/3.3 V DC	Laser output enable signal
	11	SAMPLEN	O	0/3.3 V DC	Sample/hold timing switching signal
	12	+3.3V1	O	3.3 V DC	3.3 V DC power source
YC12	1	OUT-	O	Analog	Speaker sound signal (-)
Connected to the speaker	2	OUT+	O	Analog	Speaker sound signal (+)
YC16	1	PILED	O	3.3 V DC	3.3 V DC power source
Connected to the MP paper sensor	2	GND	-	-	Ground
	3	HANDSN	I	0/3.3 V DC	MP paper sensor: On/Off
YC17	1	+24V3	O	24 V DC	24 V DC power source
Connected to the main motor	2	GND	-	-	Ground
	3	MMOTRDYN	I	0/3.3 V DC	Main motor ready signal
	4	MMOTCLK	O	0/3.3 V DC (pulse)	Main motor clock signal
	5	REMOTEN	O	0/3.3 V DC	Main motor: On/Off
YC18	1	PILED	O	3.3 V DC	3.3 V DC power source
Connected to the paper sensor	2	GND	-	-	Ground
	3	PAPER	I	0/3.3 V DC	Paper sensor: On/Off
YC19	1	PILED	O	3.3 V DC	3.3 V DC power source
Connected to the exit sensor	2	GND	-	-	Ground
	3	EXITN	I	0/3.3 V DC	Exit sensor: On/Off

Connector	Pin	Signal	I/O	Voltage	Description
YC20	1	+24V3	O	24 V DC	24 V DC power source
Connected to the registration clutch, paper feed clutch and developing clutch	2	REGDRN	O	0/24 V DC	Registration clutch: On/Off
	3	+24V3	O	24 V DC	24 V DC power source
	4	FEDDRN	O	0/24 V DC	Paper feed clutch: On/Off
	5	+24V3	O	24 V DC	24 V DC power source
	6	DLPDRN	O	0/24 V DC	Developing clutch: On/Off
YC21	1	+24V3	O	24 V DC	24 V DC power source
Connected to the MP paper feed solenoid	2	MPFDRN	O	0/24 V DC	MP paper feed solenoid: On/Off
YC23	1	+24V1	I	24 V DC	24 V DC power source
Connected to the high voltage PWB	2	+3.3V1	O	3.3 V DC	3.3 V DC power source
	3	ZCROSS	I	0/3.3 V DC (pulse)	Zero cross signal
	4	FAN	O	0/24 V DC	Left cooling fan motor: On/Off
	5	HEATN	O	0/3.3 V DC	Fuser heater: On/Off
	6	SLEEP	O	0/3.3 V DC	Sleep mode signal: On/Off
	7	MHVDR	O	0/3.3 V DC	Main charger output signal: On/Off
	8	RTHVDR	O	0/3.3 V DC	Transfer (reverse) bias output signal: On/Off
	9	PSEL1	O	0/3.3 V DC	Transfer (reverse) bias control signal: On/Off
	10	HVCLK	O	0/3.3 V DC (pulse)	Developing bias clock signal
	11	REGN	I	0/3.3 V DC	Registration sensor: On/Off
	12	TCNT	O	PWM	Transfer current control signal
	13	MCNT	O	PWM	Main charger output control signal
	14	THVDR	O	0/3.3 V DC	Transfer bias output signal: On/Off
	15	CASE	I	Analog	Cassette switch: On/Off
	16	THERM	I	Analog	Fuser thermistor detection voltage
	17	+24V3	O	24 V DC	24 V DC power source
	18	SGND	-	-	Ground
	19	SEPA	-	-	-
YC24	1	+3.3V1	O	3.3 V DC	3.3 V DC power source
Connected to the waste toner sensor	2	TNFULL	I	0/3.3 V DC	Waste toner full detection signal
	3	SGND	-	-	Ground

Connector	Pin	Signal	I/O	Voltage	Description
YC25	1	+24V2	I	24 V DC	24 V DC power source
Connected to the high voltage PWB	2	+24V2	I	24 V DC	24 V DC power source
	3	PGND	-	-	Ground
	4	PGND	-	-	Ground
YC26	1	+3.3V1	O	3.3 V DC	3.3 V DC power source
Connected to the toner sensor	2	TEMPTY	I	0/3.3 V DC	Toner quantity detection signal
	3	SGND	-	-	Ground
YC27	1	+24V1	O	24 V DC	24 V DC power source
Connected to the right cooling fan motor	2	FAN	O	0/24 V DC	Right cooling fan motor: On/Off
YC28	1	ERASER	O	0/24 V DC	Eraser lamp: On/Off
Connected to the eraser lamp	2	ERASRW	O	24 V DC	24 V DC power source
YC29	1	DUDR1	O	0/24 V DC	Duplex solenoid (activate): On/Off
Connected to the duplex solenoid	2	COMMON	O	24 V DC	24 V DC power source
	3	DUDR2	O	0/24 V DC	Duplex solenoid (return): On/Off
YC30	1	+24V3	O	24 V DC	24 V DC power source
Connected to the optional paper feeder (PF main PWB)	2	PGND	-	-	Ground
	3	PFSI	I	0/3.3 V DC (pulse)	Serial communication data input signal
	4	PFSO	O	0/3.3 V DC (pulse)	Serial communication data output signal
	5	PSEL	O	0/3.3 V DC	Paper feeder selection signal
	6	+3.3V1	O	3.3 V DC	3.3 V DC power source
YC32	1	POWERSW	I	0/3.3 V DC	Power switch: On/Off
Connected to the power switch	2	NC	-	-	Not used
	3	GND	-	-	Ground

2-3-3 Scanner PWB

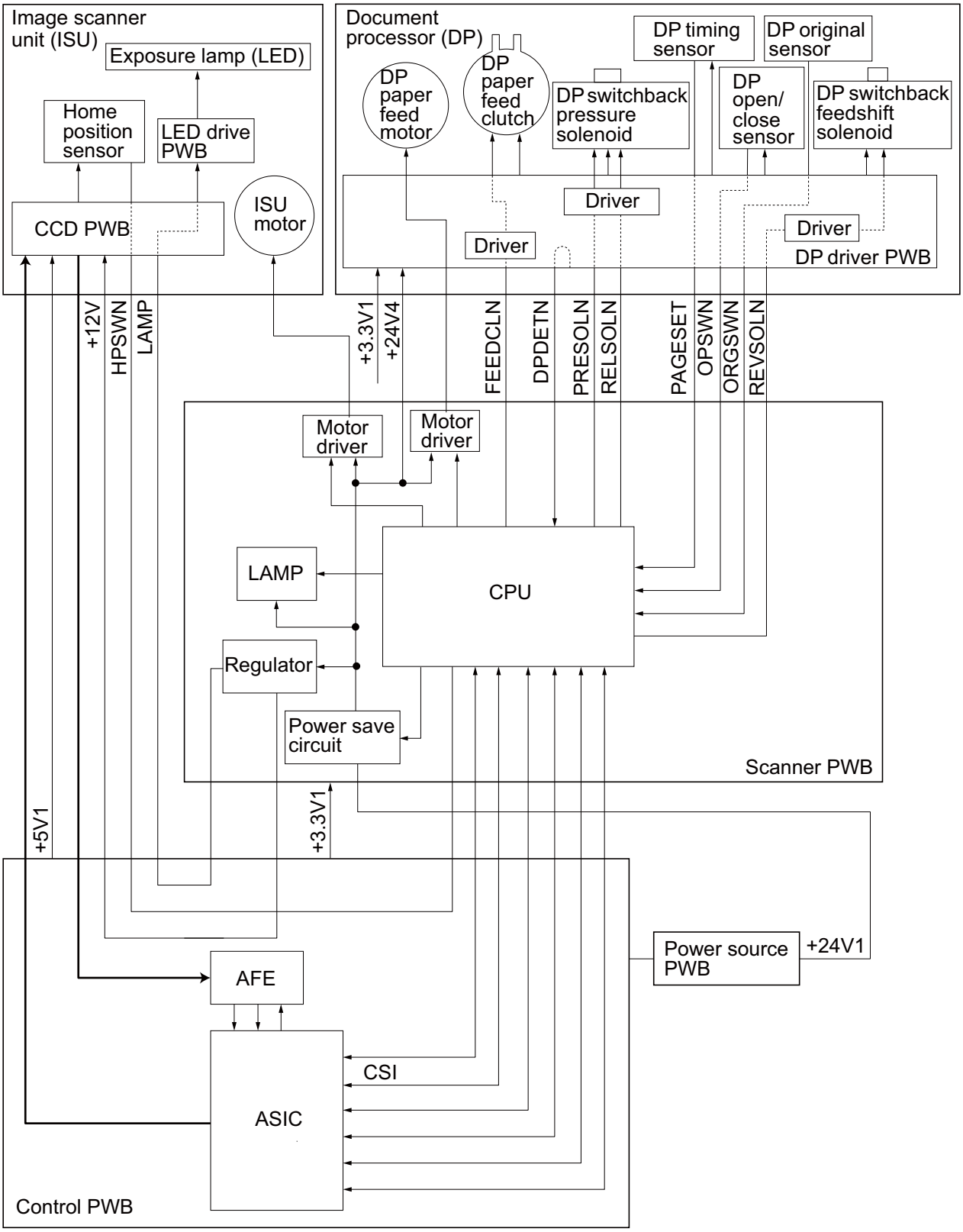

Figure 2-3-5 Scanner PWB block diagram

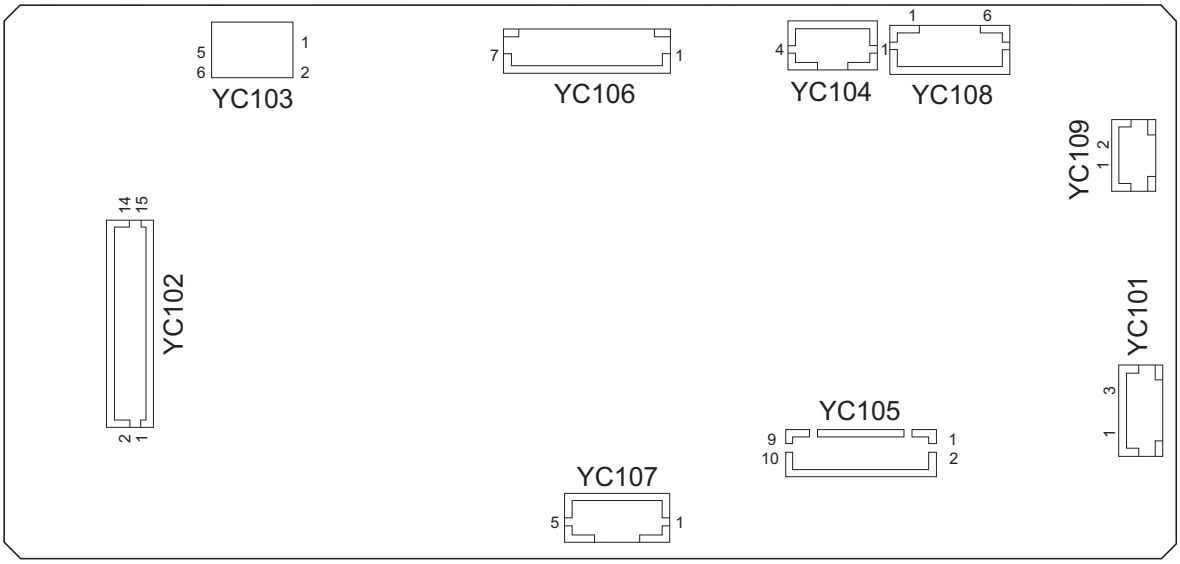

Figure 2-3-6 Scanner PWB silk-screen diagram

Connector	Pin	Signal	I/O	Voltage	Description
YC101	1	+24V1	O	24 V DC	24 V DC power source
Connected to the power source PWB	2	N.C.	-	-	Not used
	3	GND	-	-	Ground
YC102	1	SEGIR	O	0/3.3 V DC	Serial communications interruption demand
Connected to the control PWB	2	SSDIR	O	0/3.3 V DC	Serial communications trans./recep. change
	3	SSBSY	O	0/3.3 V DC	Impossible transmission/Completion notice
	4	SEGSI	I	0/3.3 V DC (pulse)	Serial communications data output
	5	SSCKN	I	0/3.3 V DC (pulse)	Serial communications clock
	6	SEGSO	O	0/3.3 V DC	Vertical synchronizing signal
	7	PAGESET	I	0/3.3 V DC	Vertical synchronizing monitor signal
	8	OVMONOUT	I	0/3.3 V DC	Communications ready signal
	9	CPURDY	I	0/3.3 V DC	Communications ready signal
	10	CPUSEL	O	0/3.3 V DC	Communications select signal
	11	CPUSO	I	0/3.3 V DC (pulse)	Serial communications data input
	12	CPUSI	O	0/3.3 V DC (pulse)	Serial communications data output
	13	CPUCLK	O	0/3.3 V DC (pulse)	Serial communications clock signal
	14	+3.3V1	I	3.3 V DC	3.3 V DC power source
	15	GND	-	-	Ground

Connector	Pin	Signal	I/O	Voltage	Description
YC103	1	+12V	I	12 V DC	12 V DC power source
Connected to the control PWB	2	GND	-	-	Ground
	3	HPSW	I	0/3.3 V DC	Home position sensor: On/Off
	4	GND	-	-	Ground
	5	NC	-	-	Not used
	6	LAMP	I	0/24 V DC	Exposure lamp drive signal
YC104	1	SCMOT1A	O	0/24 V DC (pulse)	ISU motor drive pulse
Connected to the ISU motor	2	SCMOT2A	O	0/24 V DC (pulse)	ISU motor drive pulse
	3	SCMOT1B	O	0/24 V DC (pulse)	ISU motor drive pulse
	4	SCMOT2B	O	0/24 V DC (pulse)	ISU motor drive pulse
YC105	1	+3.3V1	O	3.3 V DC	3.3 V DC power source
Connected to the DP driver PWB	2	GND	-	-	Ground
	3	TIMSWN	I	0/3.3 V DC	DP timing sensor: On/Off
	4	ORGSWN	I	0/3.3 V DC	DP original sensor: On/Off
	5	OPSWN	I	0/3.3 V DC	DP open/close sensor: On/Off
	6	DPDETN	I	0/3.3 V DC	DP installation detection signal
	7	RELSOLN	O	0/24 V DC	DP switchback pressure solenoid: (Release) On/Off
	8	PRESOLN	O	0/24 V DC	DP switchback pressure solenoid (Press.): On/Off
	9	REVSOL	O	0/24 V DC	DP switchback feedshift solenoid: On/Off
	10	FEEDCL	O	0/24 V DC	DP paper feed clutch: On/Off
YC108	1	MOT1A	O	0/24 V DC (pulse)	DP paper feed motor drive pulse
Connected to the DP driver PWB	2	MOT2A	O	0/24 V DC (pulse)	DP paper feed motor drive pulse
	3	MOT1B	O	0/24 V DC (pulse)	DP paper feed motor drive pulse
	4	MOT2B	O	0/24 V DC (pulse)	DP paper feed motor drive pulse
	5	+24V4	O	24 V DC	24 V DC power source
	6	GND	-	-	Ground
YC109	1	+24V4	O	24 V DC	24 V DC power source
Connected to the DP driver PWB	2	GND	-	-	Ground

2-3-4 DP drive PWB

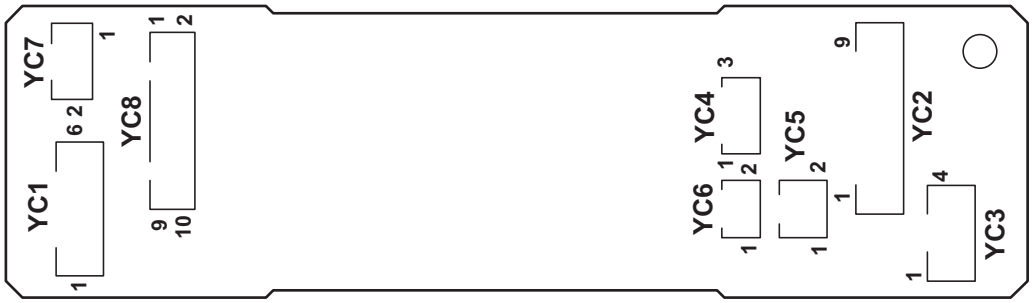

Figure 2-3-7 DP drive PWB silk-screen diagram

Connector	Pin	Signal	I/O	Voltage	Description
YC1	1	MOT1A	I	0/24 V DC (pulse)	DPPFM drive control signal
Connected to scanner PWB	2	MOT2A	I	0/24 V DC (pulse)	DPPFM drive control signal
	3	MOT1B	I	0/24 V DC (pulse)	DPPFM drive control signal
	4	MOT2B	I	0/24 V DC (pulse)	DPPFM drive control signal
	5	+24V4	I	24 V DC	24 V DC power from MPWB
	6	GND	-	-	Ground
YC2	1	PILED	O	3.3 V DC	3.3 V DC power to DPOCS
Connected to DP open/ close sensor, DP original sensor and DP timing sensor	2	GND	-	-	Ground
	3	OPSWN	I	0/3.3 V DC	DPOCS: On/Off
	4	PILED	O	3.3 V DC	3.3 V DC power to DPOS
	5	GND	-	-	Ground
	6	ORGSWN	I	0/3.3 V DC	DPOS: On/Off
	7	PILED	O	3.3 V DC	3.3 V DC power to DPTS
	8	GND	-	-	Ground
	9	TIMSWN	I	0/3.3 V DC	DPTS: On/Off
YC3	1	DPMOT1A	O	0/24 V DC (pulse)	DPPFM drive control signal
Connected to DP paper feed motor	2	DPMOT2A	O	0/24 V DC (pulse)	DPPFM drive control signal
	3	DPMOT1B	O	0/24 V DC (pulse)	DPPFM drive control signal
	4	DPMOT2B	O	0/24 V DC (pulse)	DPPFM drive control signal
YC4	1	+24V4	O	24 V DC	24 V DC power to DPPRSOL
Connected to DP pressure solenoid	2	PRESOLN	O	0/24 V DC	DPPRSOL: ON (Press)/Off
	3	RELSOLN	O	0/24 V DC	DPPRSOL: On (Release)/Off
YC5	1	+24V4	O	24 V DC	24 V DC power to DPSBSOL
Connected to DP switch-back solenoid	2	REVSOL	O	0/24 V DC	DPSBSOL: On/Off
YC6	1	+24V4	O	24 V DC	24 V DC power to DPPFCL
Connected to DP paper feed clutch	2	FEEDCL	O	0/24 V DC	DPPFCL: On/Off
YC7	1	+24V4	I	24 V DC	24 V DC power from SCPWB
Connected to scanner PWB	2	GND	-	-	Ground

Connector	Pin	Signal	I/O	Voltage	Description
YC8	1	+3.3V	I	3.3 V DC	3.3 V DC power from MPWB
Connected to scanner PWB	2	GND	-	-	Ground
	3	TIMSWN	O	0/3.3 V DC	DPTS: On/Off
	4	ORGSWN	O	0/3.3 V DC	DPOS: On/Off
	5	OPSWN	O	0/3.3 V DC	DPOCS: On/Off
	6	DPDETN	O	0/3.3 V DC	DP set signal
	7	RELSOLN	I	0/24 V DC	DPPRSOL: On (Release)/Off
	8	PRESOLN	I	0/24 V DC	DPPRSOL: ON (Press)/Off
	9	REVSOL	I	0/24 V DC	DPSBSOL: On/Off
	10	FEEDCL	I	0/24 V DC	DPPFCL: On/Off

2-4-1 Appendixes

(1) Wiring diagram

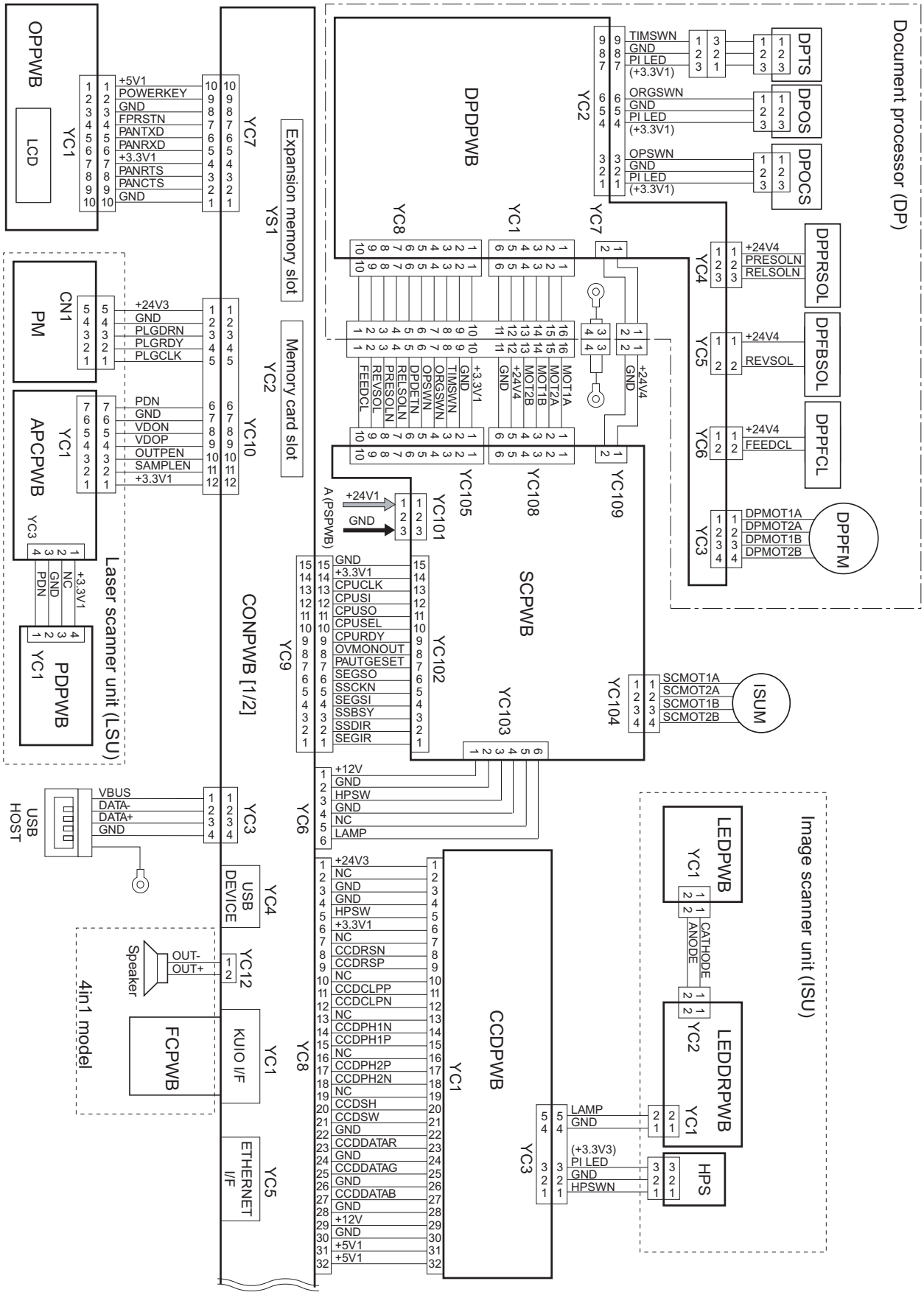

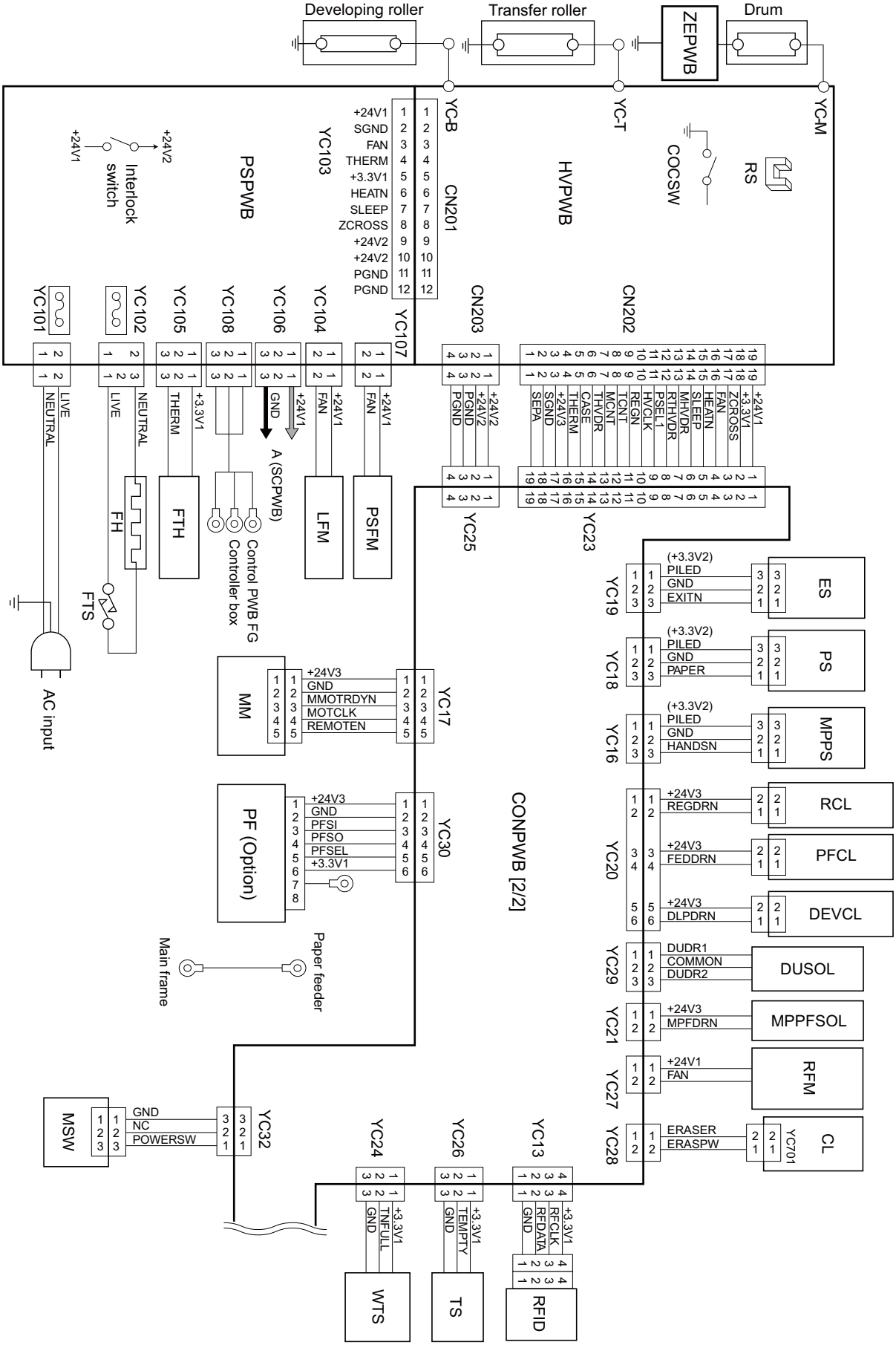
Developing roller
Transfer roller
Drum
ZEPWB
YC-M
YC-T
YC-B
RS
COCSW
HVPWB
CN202
CN201
CN203
YC107
YC103
PSPWB
Interlock switch
+24V1
+24V2
YC101
YC102
YC105
YC108
YC106
YC104
LIVE
NEUTRAL
THERM
+3.3V1
GND
FAN
A (SCPWB)
Control PWB FG
Controller box
FH
FTH
LFM
PSFM
FTS
AC input
YC25
YC23
ES
PS
MPPS
RCL
PFCL
DEVCL
DUSOL
MPPFSOL
RFM
CL
YC701
YC19
YC18
YC16
YC20
YC29
YC21
YC27
YC28
PILED
EXITN
PAPER
HANDSN
REGDRN
FEDDRN
DLPDRN
DUDR1
COMMON
DUDR2
MPFDRN
ERASER
ERASPW
MM
YC17
MMOTRDYN
MOTCLK
REMOTEN
PF (Option)
YC30
PFSI
PFSO
PFSEL
Main frame
Paper feeder
CONPWB [2/2]
MSW
YC32
POWERSW
YC24
YC26
YC13
TNFULL
TEMPTY
RFCLK
RFDATA
WTS
TS
RFID

(2) Repetitive defects gauge

First occurrence of defect

[24.99 mm/1"] Upper registration roller

[37.68 mm/1 1/2"] Lower registration roller

[45.216 mm/1 3/4"] Transfer roller

[62.8 mm/2 1/2"] Developing roller (developing unit)

[73.162 mm/2 7/8"] Heat roller (fuser unit)

[78.5 mm/3 1/16"] Press roller (fuser unit)

[94 mm/3 11/16"] Drum (drum unit)

(3) Maintenance parts list

Maintenance part name		Part No.	Alternative part No.
Name used in service manual	**Name used in parts list**		
Maintenance kit (For 30ppm, 100,000page)	MK-1130/MAINTENANCE KIT (OPTION) DK-150 DV-132(U)	1702MJ0NL0	072MJ0NL
	MK-1132/MAINTENANCE KIT (OPTION) DK-150 DV-130(E)	1702MJ0KL0	072MJ0KL
	MK-1134/MAINTENANCE KIT (OPTION) DK-150 DV-134(AO)	1702MJ0AS0	072MJ0AS
Maintenance kit (For 35ppm, 100,000page)	MK-1140/MAINTENANCE KIT (OPTION) DK-150 DV-132(U)	1702ML0NL0	072ML0NL
	MK-1142/MAINTENANCE KIT (OPTION) DK-150 DV-130(E)	1702ML0KL0	072ML0KL
	MK-1144/MAINTENANCE KIT (OPTION) DK-150 DV-134(AO)	1702ML0AS0	072ML0AS

(4) Firmware Environment Commands

The printer maintains a number of printing parameters in its memory. There parameters may be changed permanently with the FRPO (Firmware RePrOgram) commands.
This section provides information on how to use the FRPO command and its parameters using examples.

Using FRPO Commands for Reprogramming Firmware

The current settings of the FRPO parameters are listed as optional values on the service status page.

Note: Before changing any FRPO parameter, print out a service status page, so you will know the parameter values before the changes are made. To return FRPO parameters to their factory default values, send the FRPO INIT (FRPO-INITialize) command.(!R! FRPO INIT; EXIT;)

The FRPO command is sent to the printer in the following sequence:
!R! FRPO parameter, value; EXIT;
Example: Changing emulation mode to PC-PR201/65A
!R! FRPO P1, 11; EXIT;

FRPO Parameters

Environment	Parameter	Values	Factory setting
Top margin	A1 A2	Integer value in inches Fraction value in 1/100 inches	0 0
Left margin	A3 A4	Integer value in inches Fraction value in 1/100 inches	0 0
Page length	A5 A6	Integer value in inches Fraction value in 1/100 inches	13 61
Page width	A7 A8	Integer value in inches Fraction value in 1/100 inches	13 61
Default pattern resolution	B8	0: 300 dpi 1: 600 dpi	0
Copy count	C0	Number of copies to print:1-999	1
Page orientation	C1	0: Portrait 1: Landscape	0
Default font No. *	C2 C3 C5	Middle two digits of power-up font Last two digits of power-up font First two digits of power-up font	0 0 0
PCL font switch	C8	0:HP compatibility mode (Characters higher than 127 are not printed.) 32:Conventional mode (Characters higher than 127 are printed. Supported symbol sets: ISO-60 Norway [00D], ISO-15 Italian [00I], ISO-11 Sweden [00S], ISO-6 ASCII [00U], ISO-4 U.K. [01E], ISO-69 France [01F], ISO-21 Germany [01G], ISO-17 Spain [02S], Symbol [19M][a])	0
Total host buffer size	H8	0 to 99 in units of the size defined by FRPO S5	5
Form feed time-out value	H9	Value in units of 5 seconds (0 to 99).	6
KIR mode	N0	0: Off 2: On	2

Environment	Para meter	Values	Factory setting
Duplex binding	N4	0: Off 1: Long edge 2: Short edge	0
Sleep timer time-out time	N5	1 to 240 minutes [0: Off]	15
Ecoprint level	N6	0:Off 2:On	0
Printing resolution	N8	0: 300dpi 1: 600dpi 3: 1200dpi	1
Default emulation mode	P1	0: Line Printer 1: IBM Proprinter X24E 2: Diablo 630 5: Epson LQ-850 6: PCL 6 9: KPDL	9 (U.S.A) or 6 (Euro and other)
Carriage-return action *	P2	0: Ignores 0x0d 1: Carriage-return 2: Carriage-return+linefeed	1
Linefeed action *	P3	0: Ignores 0x0d 1: Linefeed 2: Linefeed+carriage-return	1
Automatic emulation sensing (For KPDL3)	P4	0:AES disabled 1:AES enabled	1 (U.S.A) or 0 (Euro and other)
Alternative emulation (For KPDL3)	P5	Same as the P1 values except that 9 is ignored.	6
Automatic emulation switching trigger (For KPDL3)	P7	0: Page eject commands 1: None 2: Page eject and Prescribe EXIT 3: Prescribe EXIT 4: Formfeed (^L) 6: Page eject, Prescribe EXIT and formfeed 10: Page eject commands; if AES fails, resolves to KPDL	11 (U.S.A) or 10 (Euro and other)
Command recognition character	P9	ASCII code of 33 to 126	82 (R)

Environment	Para meter	Values	Factory setting
Default paper size	R2	0: Size of the default paper cassette (See R4.) 1: Monarch (3-7/8 × 7-1/2 inches) 2: Business (4-1/8 × 9-1/2 inches) 3: International DL (11 × 22 cm) 4: International C5 (16.2 × 22.9 cm) 5: Executive (7-1/4 × 10-1/2 inches) 6: US Letter (8-1/2 × 11 inches) 7: US Legal (8-1/2 × 14 inches) 8: A4 (21.0 × 29.7 cm) 9: B5 (18.2 × 25.7 cm) 13: A5 14: A6 (10.5 × 14.8 cm) 15: B6 (12.8 × 18.2 cm) 16: Commercial #9 (3-7/8 × 8-7/8 inches) 17: Commercial #6 (3-5/8 × 6-1/2 inches) 18: B5 (17.6 × 25 cm) 19: Custom (11.7 × 17.7 inches)f 20: B4→A4 reduces 21: A3→A4 reduces 22: A4→A4 98% reduces 23: Stock form→A4 reduces 31: Hagaki (10 × 14.8 cm)f 32: Ofuku-Hagaki (14.8 × 20 cm)f 33: Officio II 40: 16K 42: 21.6 x 34 cm 50: Statement 51: Folio 52: Youkei 2 53: Youkei 4	0
Default cassette	R4	0: Multi-purpose tray 1 1: Cassette 1 2: Cassette 2 3: Cassette 3	1
MP tray paper size	R7	Same as the R2 values except: 0	6 (U.S.A) or 8 (Euro and other)
Daisywheel data length	R8	7:7-bit 8:8-bit	7
A4/letter equation	S4	0:Off 1:On	1
Host buffer size	S5	0: 10kB (x H8) 1: 100kB (x H8) 2: 1024kB (x H8)	1
RAM disk size	S6	1 to 1024 MB	400

Environment	Para meter	Values	Factory setting
RAM disk mode	S7	0: Off 1: On	0
Cassette 1 paper size	T1	4: International C5 (16.2 × 22.9 cm) 5: Executive (7-1/4 × 10-1/2 inches) 6: US Letter (8-1/2 × 11 inches) 7: US Legal (8-1/2 × 14 inches) 8: A4 (21.0 × 29.7 cm) 9: B5 (18.2 × 25.7 cm) 13: A5 14: A6 (10.5 × 14.8 cm) 18: B5 (17.6 × 25 cm) 19: Custom (11.7 × 17.7 inches)f 33: Officio II 40: 16K 42:216x340 50: Statement 51: Folio	6 (U.S.A) or 8 (Euro and other)
Cassette 1 paper size	T2	4: International C5 (16.2 × 22.9 cm) 5: Executive (7-1/4 × 10-1/2 inches) 6: US Letter (8-1/2 × 11 inches) 7: US Legal (8-1/2 × 14 inches) 8: A4 (21.0 × 29.7 cm) 9: B5 (18.2 × 25.7 cm) 13: A5 18: B5 (17.6 × 25 cm) 19: Custom (11.7 × 17.7 inches)f 33: Officio II 40: 16K 42:216x340 51: Folio	6 (U.S.A) or 8 (Euro and other)
Cassette 1 paper size	T3	Same as above.	6 (U.S.A) or 8 (Euro and other)
Wide A4	T6	0:Off 1:On	0
Line spacing *	U0	Lines per inch (integer value)	6
Line spacing *	U1	Lines per inch (fraction value)	0
Character spacing *	U2	Characters per inch (integer value)	10
Character spacing *	U3	Characters per inch (fraction value)	0

Environment	Para meter	Values	Factory setting
Country code	U6	0: US-ASCII 1: France 2: Germany 3: UK 4: Denmark 5: Sweden 6: Italy 7: Spain 8: Japan 9: US Legal 10: IBM PC-850 (Multilingual) 11: IBM PC-860 (Portuguese) 12: IBM PC-863 (Canadian French) 13: IBM PC-865 (Norwegian) 14: Norway 15: Denmark 2 16: Spain 2 17: Latin America 21: US ASCII (U7=50 SET) 77: HP Roman-8 (U7=52 SET)	41
Code set at power up in daisywheel emulation	U7	0: Same as the default emulation mode (P1) 1: IBM 6: IBM PC-8 50: US ASCII (U6=21 SET) 52: HP Roman-8 (U6=77 SET)	53
Font pitch for fixed pitch scalable font	U8	Integer value in cpi: 0 – 99	10
	U9	Fraction value in 1/100 cpi: 0 – 99	0
Font height for the default scalable font *	V0	Integer value in 100 points: 0–9	0
	V1	Integer value in points: 0–99	12
	V2	Fraction value in 1/100 points: 0, 25, 50, 75	0
Default scalable font *	V3	Name of typeface of up to 32 characters, enclosed with single or double quotation marks	Courier
Default weight (courier and letter Gothic)	V9	0:Courier = darkness Letter Gothic = darkness 1:Courier = regular letter Gothic = darkness 4:Courier = darkness Letter Gothic = regular 5:Courier = regular letter Gothic = regular	5

Environment	Para meter	Values	Factory setting
Paper type for the MP tray	X0	1: Plain 1 2: Transparency 3: Preprinted 4: Label 5: Bond 6: Recycle 7: Vellum 9: Letterhead 10: Color 11: Prepunched 12: Envelope 13: Cardstock 16: Thick 17: High Quality 21: Custom1 22: Custom2 23: Custom3 24: Custom4 25: Custom5 26: Custom6 27: Custom7 28: Custom8	1
Paper type for paper cassettes 1	X1	1: Plain 3: Preprinted 5: Bond 6: Recycled 9: Letterhead 10: Color 11: Prepunched 17: High Quality 21: Custom1 22: Custom2 23: Custom3 24: Custom4 25: Custom5 26: Custom6 27: Custom7 28: Custom8	1

Environment	Para meter	Values	Factory setting
Paper type for paper cassettes 2 to 4	X2 X3	1: Plain 3: Preprinted 5: Bond 6: Recycled 9: Letterhead 10: Color 11: Prepunched 17: High Quality 21: Custom1 22: Custom2 23: Custom3 24: Custom4 25: Custom5 26: Custom6 27: Custom7 28: Custom8	1
PCL paper source	X9	0: Performs paper selection depending on media type. 1: Performs paper selection depending on paper sources.	0
Automatic continue for ‘Press GO’	Y0	0:Off 1:On	0
Automatic continue timer	Y1	number from 0 to 99 in increments of 5 seconds	6 (30secons)

Environment	Para meter	Values	Factory setting
Error message for device error	Y3	0:Not Detect 1:Detect	127
Duplex operation for specified paper type (Prepunched, Preprintedand Letter-head)	Y4	0:Off 1:On	0
Default operation for PDF direct printing	Y5	0: Enlarges or reduces the image to fit in the current paper size. Loads paper from the current paper cassette. 1: Through the image. Loads paper which is the same size as the image. 2: Enlarges or reduces the image to fit in the current paper size. Loads Letter, A4 size paper depending on the image size. 3: Through the image. Loads Letter, A4 size paper depending on the image size. 8: Through the image. Loads paper from the current paper cassette. 9: Through the image. Loads Letter, A4 size paper depending on the image size. 10: Enlarges or reduces the image to fit in the current paper size. Loads Letter, A4 size paper depending on the imagesize.	0

a. Characters higher than 127 are printed regardless of the C8 value. However, setting C8 to 0 does not print character code 160.

*. Ignored in some emulation modes.

INSTALLATION GUIDE FOR PAPER FEEDER

KYOCERA

PF-120

安装手册
インストールガイド
Installation Guide
Guide d'installation
Guía de instalación
Installationsanleitung
Guida all'installazione

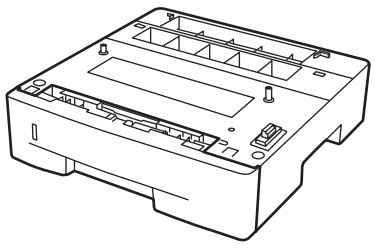

[120 V specifications only]
NOTICE
This accessory is for use only with the following Applicant's Listed Machine. Refer to the supplied guide to install the accessory in the field.
Machine: FS-1030MFP, FS-1130MFP, FS-1035MFP, FS-1135MFP

PF-120的安装
PF-120の設置
Installation of PF-120
Installation de PF-120
Instalación de PF-120
Installation von PF-120
Installazione di PF-120

1

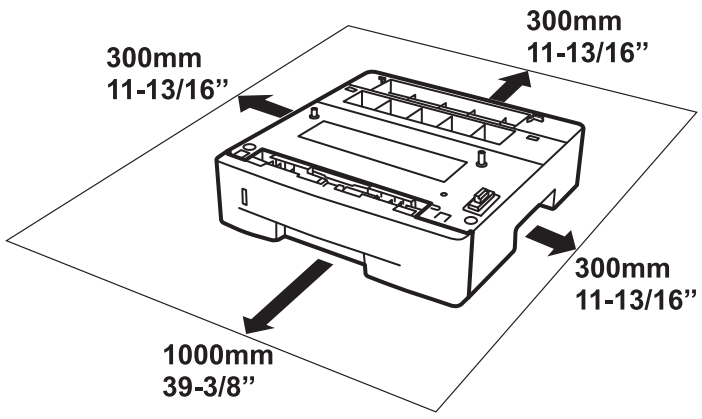

2

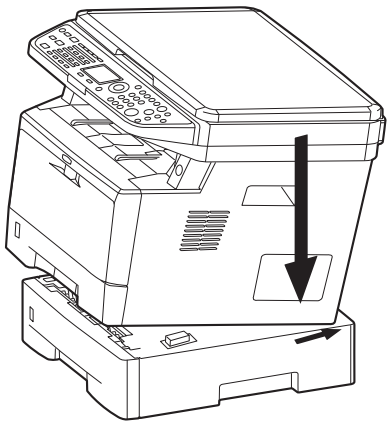

3

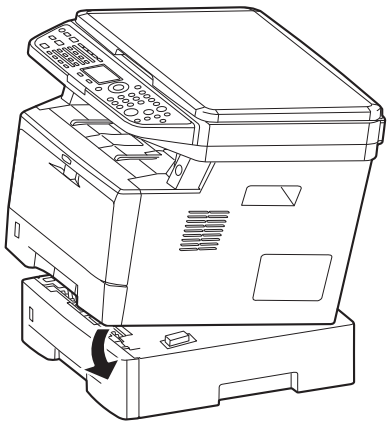

4

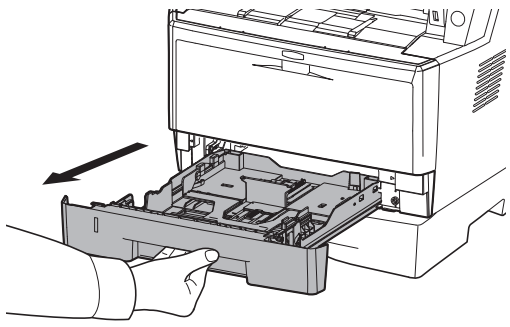

5

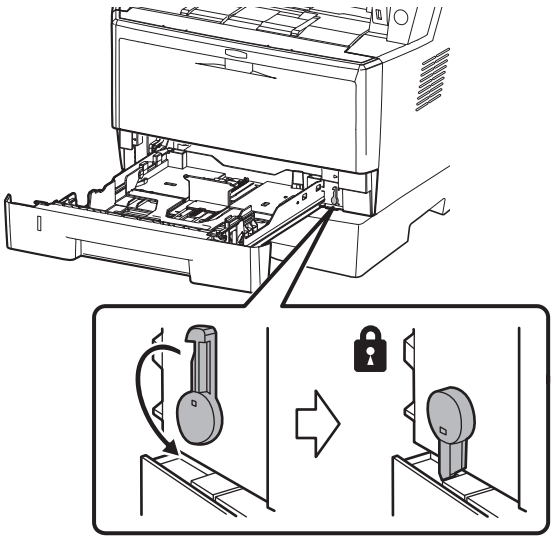

6

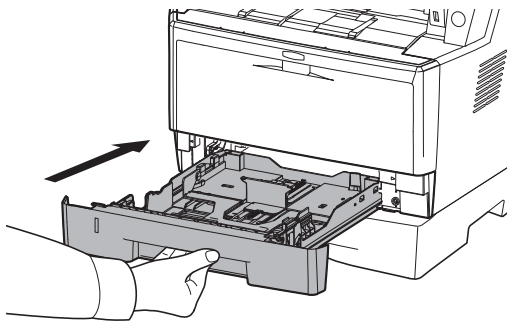

7

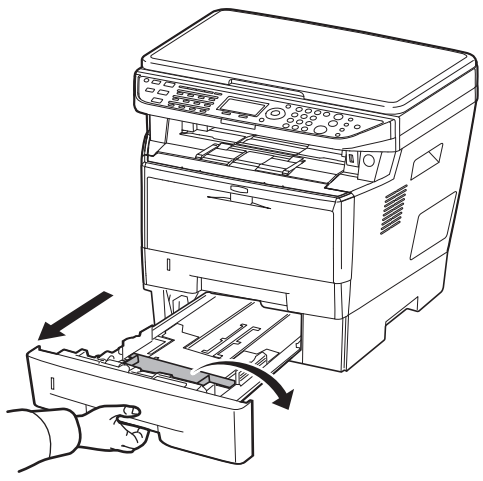

纸张大小的调整
用紙サイズの調整
Adjustment of paper size
Ajustement de format papier
Ajuste del tamaño del papel
Justage des Papierformats
Registrazione del formato carta

8

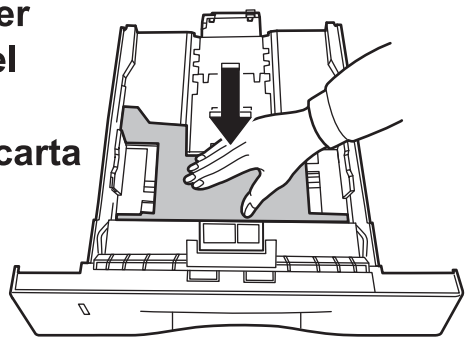

9

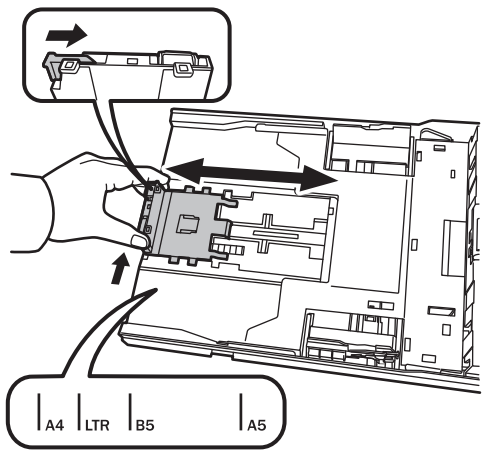

10

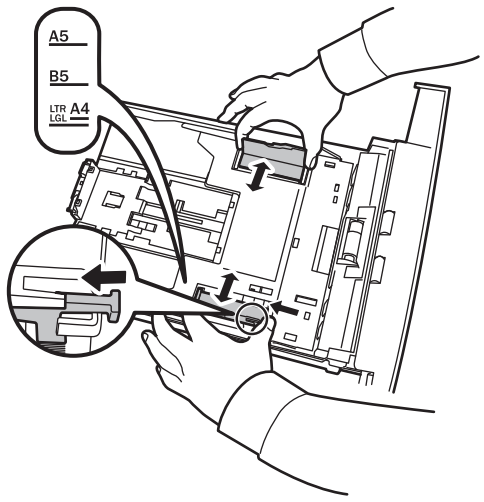

Folio / Oficio II

(1)

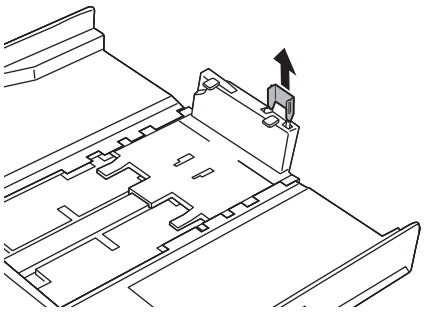

(2)

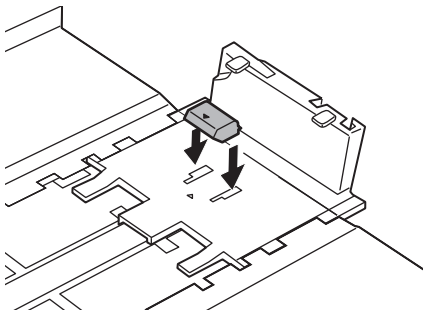

(3)

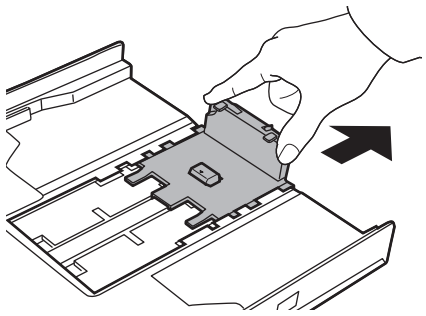

Legal

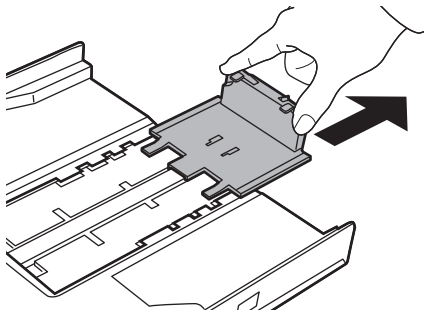

装纸
用紙のセット
Loading paper
Papier de chargement
Papel del cargamento
Ladenpapier
Carta da caricamento

11

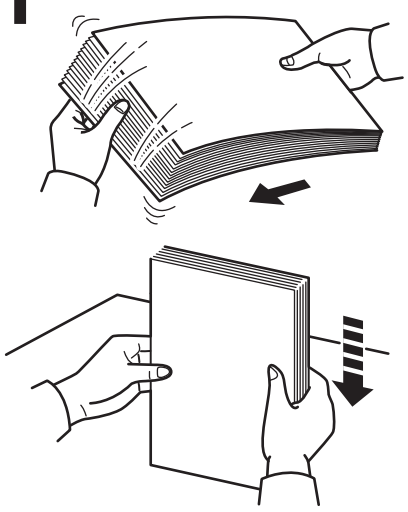

12

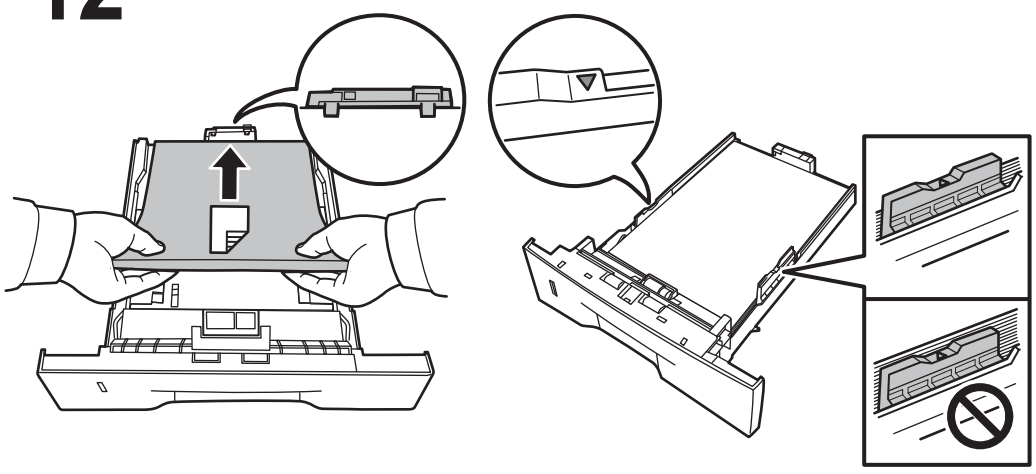

13

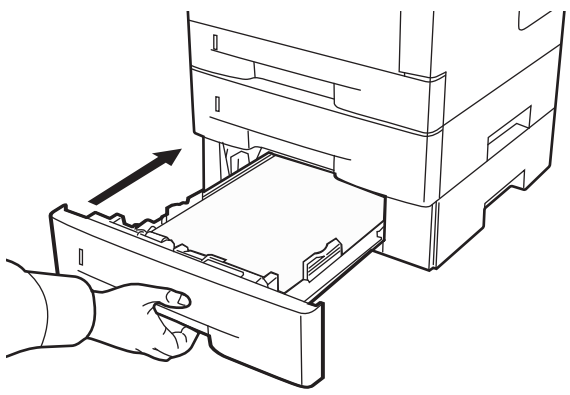

取出卡纸
紙づまりの処理
Removing Paper Jams
Solution pour les bourrages papier
Eliminación de los atascos de papel
Entfernen von Papierstaus
Rimozione degli inceppamenti carta

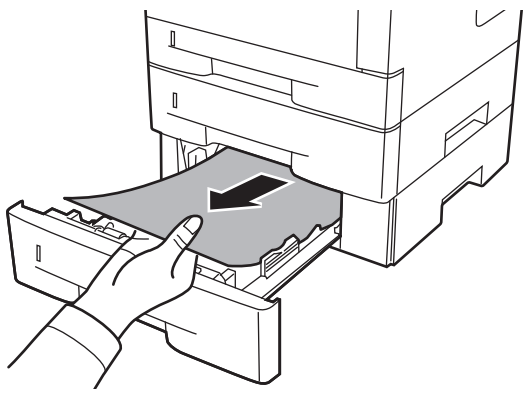

关于纸张的规格，请参阅机器的操作手册。
用紙の仕様については、本体使用説明書を参照してください。

For paper specification, refer to the machine's Operation Guide.
Avec les spécifications de papier, référez-vous au guide de l'opération de machine.
Para la especificación de papel, refiera a la guía de la operación de máquina.
Für Papierspezifikation beziehen Sie sich den auf Führer Rechneroperation.
Per la specifica di carta, riferiscasi alla guida di funzionamento della macchina.

© 2011 KYOCERA MITA Corporation 2-28, 1-Chome, Tamatsukuri, Chuo-ku Osaka 540-8585, Japan

KYOCERA MITA EUROPE B.V.

Bloemlaan 4, 2132 NP Hoofddorp,
The Netherlands
Phone: +31.20.654.0000
Home page: http://www.kyoceramita-europe.com
Email: info@kyoceramita-europe.com

KYOCERA MITA NEDERLAND B.V.

Beechavenue 25, 1119 RA Schiphol-Rijk
The Netherlands
Phone: +31.20.58.77.200

KYOCERA MITA (UK) LTD

8 Beacontree Plaza
Gillette Way Reading Berks RG2 0BS,
U.K.
Phone: +44.1189.311.500

KYOCERA MITA ITALIA S.p.A.

Via G. Verdi, 89 / 91, 20063 Cernusco s/N
Milano, Italy
Phone: +39.02.92179.1

S.A. KYOCERA MITA BELGIUM N.V.

Sint-Martinusweg 199-201, 1930 Zaventem,
Belgium
Phone: +32.2.720.9270

KYOCERA MITA FRANCE S.A.

Espace Technologique de St Aubin
Route de l' Orme
91195 Gif-sur-Yvette CEDEX, France
Phone: +33.1.6985.2600

KYOCERA MITA ESPAÑA S.A.

Edificio Kyocera, Avda de Manacor No. 2,
28290 Las Matas (Madrid),
Spain
Phone: +34.91.631.8392

KYOCERA MITA FINLAND OY

Atomitie 5C, 00370 Helsinki,
Finland
Phone: +358.9.4780.5200

KYOCERA MITA (SCHWEIZ)

Hohlstrasse 614, 8048 Zürich
Switzerland
Phone: +41.44.908.4949

KYOCERA MITA DEUTSCHLAND GMBH

Otto-Hahn-Str. 12 D-40670 Meerbusch,
Germany
Phone: +49.2159.918.0

KYOCERA MITA GMBH AUSTRIA

Eduard-Kittenberger-Gasse 95,
1230 Wien,
Austria
Phone: +43.1.86338

KYOCERA MITA SVENSKA AB

Esbogatan 16B 164 75 Kista,
Sweden
Phone: +46.8.546.55000

KYOCERA MITA NORGE

Postboks 150 Oppsal, NO 0619 Oslo
Olaf Helsetsvei 6, NO 0694 Oslo,
Norway
Phone: +47.22.62.73.00

KYOCERA MITA DANMARK A/S

Ejby Industrivej 60, DK-2600 Glostrup,
Denmark
Phone: +45.7022.3880

KYOCERA MITA PORTUGAL LDA.

Rua do Centro Cultural, 41 (Alvalade) 1700-106 Lisboa,
Portugal
Phone: +351.21.843.6780

KYOCERA MITA SOUTH AFRICA (PTY) LTD.

49 Kyalami Boulevard,
Kyalami Business Park Midrand,
South Africa
Phone: +27.(0)11.540.2600

KYOCERA MITA AMERICA, INC.

Headquarters:
225 Sand Road,
Fairfield, New Jersey 07004-0008,
U.S.A.
Phone: (973) 808-8444

KYOCERA MITA AUSTRALIA PTY. LTD.

Level 3, 6-10 Talavera Road, North Ryde,
N.S.W. 2113 Australia
Phone: (02) 9888-9999

KYOCERA MITA NEW ZEALAND LTD.

1-3 Parkhead Place, Albany
P.O. Box 302 125 NHPC, Auckland,
New Zealand
Phone: (09) 415-4517

KYOCERA MITA Asia Limited

16/F., Mita Centre,
552-566, Castle Peak Road,
Tsuen Wan, New Territories, Hong Kong
Phone: (852)-2610-2181

KYOCERA MITA Corporation

2-28, 1-chome, Tamatsukuri, Chuo-ku
Osaka 540-8585, Japan
Phone: (06) 6764-3555
http://www.kyoceramita.com

©2011 KYOCERA MITA Corporation

KYOCERA is a trademark of Kyocera Corporation

KYOCERA MITA AMERICA, INC.

Headquarters:
225 Sand Road,
Fairfield, New Jersey 07004-0008
TEL : (973) 808-8444
FAX : (973) 882-6000

New York Branch:
30-30 47th Avenue
Long Island City, NY 11101
TEL : (718) 289-2500
FAX : (718) 289-2501

Northeastern Region:
225 Sand Road,
Fairfield, New Jersey 07004-0008
TEL : (973) 808-8444
FAX : (973) 882-4401

Midwestern Region:
201 Hansen Court Suite 119
Wood Dale, Illinois 60191
TEL : (630) 238-9982
FAX : (630) 238-9487

Western Region:
14101 Alton Parkway,
Irvine, California 92618-7006
TEL : (949) 457-9000
FAX : (949) 457-9119

Southeastern Region:
3100 Breckinridge Blvd. NW Building 100,
Suite 105 Duluth, Georgia 30096
TEL : (770) 729-9786
FAX : (770) 729-9873

Southwestern Region:
2825 West Story Road,
Irving, Texas 75038-5299
TEL : (972) 550-8987
FAX : (972) 570-4704

National Operation Center
& National Training Center:
2825 West Story Road,
Irving, Texas 75038-5299
TEL : (972) 659-0055
FAX : (972) 570-5816

Latin America Division:
8240 N.W. 52nd. Terrace Dawson Building,
Suite 108 Miami, Florida 33166
TEL : (305) 421-6640
FAX : (305) 421-6666

KYOCERA MITA CANADA, LTD.

6120 Kestrel Road, Mississauga,
Ontario L5T 1S8, Canada
TEL : (905) 670-4425
FAX : (905) 670-8116

KYOCERA MITA MEXICO, S.A. DE C.V.

Av. 16 de Septiembre #407
Col. Santa Inés,
Azcapotzalco México,
D.F. 02130, México
TEL : (55) 5383-2741
FAX : (55) 5383-7804

KYOCERA MITA Brazil Ltda.

Av. Tambore, 1180 Mob.B-09 CEP 06460-000
Tambore-Barveri-SP,
Brazil
TEL : (55) 11-4195-8496
FAX : (55) 11-4195-6167

KYOCERA MITA Asia Limited

16/F., Mita Centre,
552-566, Castle Peak Road,
Tsuen Wan, New Territories, Hong Kong
Phone: (852)-2610-2181

KYOCERA MITA (Thailand) Corp., Ltd.
335 Ratchadapisek Road, Bangsue,
Bangkok, 10800, Thailand
Phone: (66)-2-586-0333

KYOCERA MITA Singapore Pte Ltd.
121 Genting Lane, 3rd Level,
Singapore 349572
Phone: (65)-6741-8733

KYOCERA MITA Hong Kong Limited
16/F., Mita Centre,
552-566, Castle Peak Road,
Tsuen Wan, New Territories,
Hong Kong
Phone: (852)-2429-7422

KYOCERA MITA Taiwan Corporation
6F., No.37, Sec. 3, Minquan E. Rd.,
Zhongshan Dist., Taipei 104, Taiwan R.O.C.
Phone: (886)-2-2507-6709

KYOCERA MITA Korea Co., Ltd.
18F, Kangnam bldg, 1321-1,
Seocho-Dong, Seocho-Gu, Seoul, Korea
Phone: (822)-6933-4050

KYOCERA MITA India Private Limited
First Floor, ORCHID CENTRE
Sector-53, Golf Course Road, Gurgaon 122
002, India
Phone: (91)-0124-4671000

©2011 KYOCERA MITA Corporation
KYOCERA is a trademark of Kyocera Corporation